NEW ZEALAND

building today

THE OFFICIAL MAGAZINE OF THE REGISTERED MASTER BUILDERS FEDERATION

FEBRUARY 2008
VOL 18 NO 1

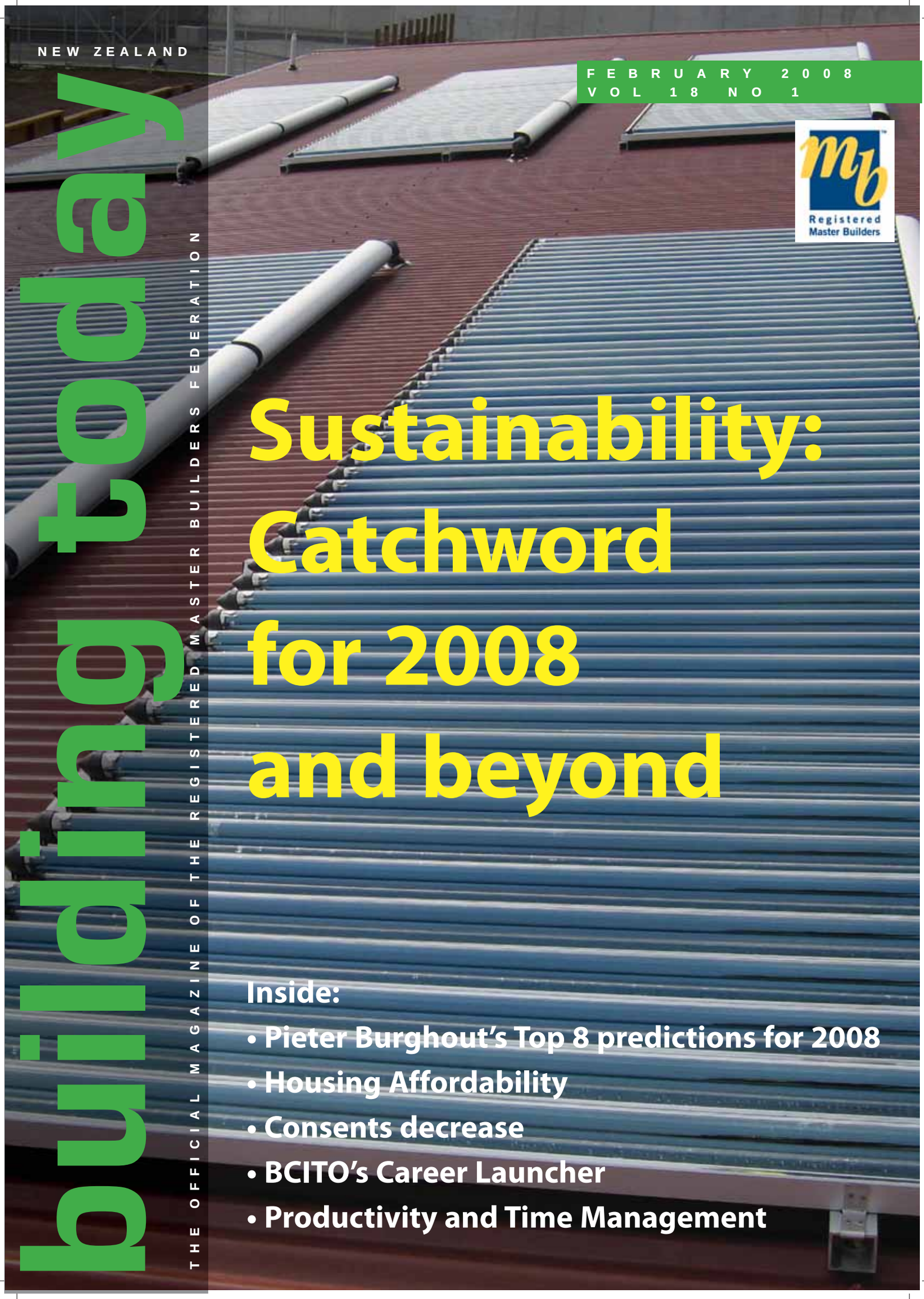

Sustainability: Catchword for 2008 and beyond

Inside:

- Pieter Burghout's Top 8 predictions for 2008
- Housing Affordability
- Consents decrease
- BCITO's Career Launcher
- Productivity and Time Management

A lower mobile calling rate that gives you a better way to

BUILD BUSINESS

FREE SANYO 7050

when you sign up to a 24-month Telecom Construction plan

Rugged, anti-slip, dust, shock and vibration proof

Want to pay less for the business mobile calls you make most? The Telecom Construction plan lets you set up a discounted calling rate to designated Telecom numbers, which means it's cheaper to call key clients, suppliers or your team to keep things ticking over.

+ Get a 3-month access holiday
when you sign up before 29th February 2008

Connecting New Zealand Business

Telecom

Contact us today:

126 | telecom.co.nz/mobileconstruction | Telecom store or dealer

SAATCHITBS0166_B

Telecom terms, conditions, credit criteria and monthly access fee apply. 3 months free access offer available on Team Builder, Team Builder One or Industry (Construction, Professional (legal & financial) Services, Transport & Agriculture) connections to 24-month plans from 1 November 2007 to 29 February 2008. Offer excludes Team Builder Zero and Real Estate Plans. Handset offer available until 29 February 2008, or while stocks last. Discounted calling rate applies to all calls made by a Construction Mobile to one of the 10 nominated team "calling group" phones (Telecom mobiles or land lines) or any Construction Mobiles on the same Telecom customer number. You need to have three or more mobiles under the same customer number on the Construction plan to qualify for the discounted calling rate. See telecom.co.nz/mobileconstruction for full details. Disconnection fees will apply if you terminate your 24-month contract early. The Construction call plan is available to business customers operating in the Construction sector only, until further notice.

contents

FEBRUARY 2008 | VOL 18 NO. 1

building today

The so-called second "Green wave" has hit the New Zealand construction industry in a big way over the past few months — and it's here to stay!

The catchword "Sustainability" is one that people might have been getting heartily sick of in recent times.

But the fact you've probably been reading so much about it in recent months is a clear and unequivocal indication that the concept has become a permanent fixture in the construction process these days — to the point where the RMBF has even introduced three Sustainability categories in this year's House of the Year awards programme.

In Part 1 of our Sustainability feature this month we explain the concept and the technical terms and systems used to quantify exactly what is a sustainable building, along with other industry news and initiatives on the topic.

Andrew Darlington
Editor

inside this issue

RMBF News 4-9

Pieter Burghout's Top 8 predictions for 2008; HOY sustainability category added

Industry News 10-21

Housing affordability; Building consents decrease; Construction law conference

Sustainability 22-27

Steel initiatives; Beacon Pathways; Home Energy Ratings system

Products 28-29

Schist; Masonry; Tiles; Sealants

Steel 30-32

CPD scheme introduced

BCITO News 34

Career Launcher up and running

Columnists 35-38

Companies Act 1993 and "clawbacks"; Productivity and Time Management

cover stories 22-27

Publisher: Taurean Publications Ltd,
P O Box 35 343, Browns Bay
Top Floor, 39 Anzac Road, Browns Bay, Auckland
Editor: Andrew Darlington
Ph: 09 478 4888 Mob: 021 90 11 56 Fax: 09 478 4588
E-mail: andrew@buildingtoday.co.nz
Advertising Manager: Mike Rynne
Ph: 09 426 2436 Mob: 0274 949 064 Fax: 09 478 4588
E-mail: mike@buildingtoday.co.nz

BUILDING TODAY is the official magazine of the Registered Master Builders' Federation.
Advertising statements and editorial opinions expressed in Building Today do not necessarily reflect the views of RMBF members, its executive or committees; or of the chief executive and staff unless expressly stated. Further, the RMBF and members are not liable for any statements made in Building Today unless otherwise stated. The editor reserves the right to edit, amend or reject copy where necessary. The publisher does not assume any responsibility or liability for any loss or damage which may result from any inaccuracy or omission in this publication, or from the use of the information contained herein. No warranties, express or implied, are made with respect to any of the material contained herein.
1-year subscription: $56.25 (GST incl). ISSN 1171-0225

chief's chat

by ceo pieter burghout

Top 8 Picks for 2008

I thought I would do something different for this first *Building Today* Chief's Chat for 2008. I think this year will be different from past ones (in quite different ways).

Here are my top eight picks for the coming year:

Strong economy, plus a stable construction industry: First, I have a hunch that the New Zealand economy will do relatively well this year, despite some international turbulence. We will see a resurgent rural economy, and the main centres will generally do well, although Auckland will be a bit flatter than usual.

Through it all, the construction industry will stay stable — new building consents will flatten down to 25,000 for the year, renovation work will stay at record highs, commercial work will stay strong and infrastructure work will expand.

Overall, builders will find the market a bit harder — they will have to work harder and smarter to get the work, but there will still be enough work around to keep good builders happy.

Politics will get messy in election year: Second, we have slowly been progressing to a US-like election process, where things get very messy, very personal and it's not necessarily very nice to watch.

Labour will pull out all stops to get a record fourth term, and National will do everything it can to wrest power from them. For most voters, it will come down to a personality decision — Helen versus John.

I suspect the final shape of the Government will actually be determined by the minor parties — the Greens, NZ First and the Maori Party.

Our industry will get caught up in the political fighting, particularly on issues such as housing affordability, compliance costs and sustainability.

Skills-related issues will remain the number one priority for builders: We now employ more people in the construction industry than ever before and we have more people in training/apprenticeships than ever before, but builders still have skills gaps in their businesses, particularly in the area of the 35 to 45 skilled and experienced tradespeople and foremen.

Builders will have to get sharper and smarter in how they hire, train and retain staff.

Quality issues will be a close second priority issue: There will be an increasing focus on quality issues across the sector. We have implemented the first "post leaky building" wave of quality changes — mostly "construction-related" changes.

Now that the industry has got used to these, I think builders will start looking at their internal business quality systems and processes and lift their game around these, particularly in the areas of quality control (which is, in part, related to the skills issue above) and technology, ie, using technology to help systematise best practice.

We will finally get serious on compliance issues!: Builders have put up with increasing levels of compliance for some three years now, post the leaky building reforms implemented in 2004.

Even though we have been telling the Government for the past two years that we're nearly at crisis point, this year will be the year in which the politicians will finally get it, and we have the housing affordability issue to thank for that.

We'll start to see some concerted thinking and action around this issue in the next 12 months. For certain, the construction industry cannot continue with the creaky, disparate, nonsensical levels of compliance we face today — and, unfortunately, it's going to get worse before it gets better, as councils go through their accreditation processes.

It's also clear that councils want to get this sorted themselves, and so we look forward to working with them, the Department of Building and Housing and the full range of industry stakeholders and colleagues to see how we can work together to get this fix started.

Green building issues will continue to grow in momentum: After a slow start of around 10 years ago, green building issues are here to stay, and the momentum around them will get deeper and faster. Builders will have to get their heads around what they can and need to do to keep up with this "second green wave".

Licensing will start to gain momentum: While we (Registered Master Builders) have adopted a neutral approach around the implementation of Building Practitioner Licensing, given some of the wrinkles we think still exist within the scheme, I still suspect we will see growing industry support for licensing over time.

For too long we have had cowboys in our industry who buy a box of tools and a van and call themselves builders.

They undercut quality and profitability within our industry, and licensing will still be the best way to ensure a minimum benchmark for people to attain.

So, the start of 2008 will see a small number of licence holders getting through the system and that will steadily increase by year end.

Industry leadership will remain critical: Throughout all the above issues, it will be absolutely essential that the industry leads the way. We need to continue "stepping up to the plate" to push the industry view so that we can get the outcomes we know will be right for our industry, for the public and for New Zealand as a whole.

Leadership requires courage from time to time, and Registered Master Builders will certainly be rising to that challenge this coming year.

We look forward to working with the broad spectrum of stakeholders across our industry to deliver on these outcomes.

Continued page 5

Call for judges for 2008

Would you like to be a judge in New Zealand's premier building awards programme this year?

The Registered Master Builders 2008 House of the Year and RMB Commercial Project Awards, in association with PlaceMakers, is looking for judges for the residential and commercial categories in this year's competition.

Architectural and building judges are being sought, and judges would need to be available for 10 to 25 days' judging.

Judging will take place on days to be agreed (ie, to match panel members' availability, from April 24 to the beginning of August).

Please note that judges may also be entrants in the competition — they simply won't be judging a category in which they are entered.

This works well for judging at the local level.

If you would like to be part of the judging panel of New Zealand's largest building awards programme, please send details to Kate Cooney on kcooney@dazzleevents.co.nz and she will send a letter outlining what's involved and how to apply.

If you have been a judge in a previous competition, please also register your interest with Kate at the email address above.

Top 8 picks for 2008

From page 4

And, of course, the beauty of trying to crystal ball gaze into the future is that you risk being entirely wrong with most or all of the picks you have made!

As I heard from someone a few months ago — and please excuse the semi-sexist analogy (because it's not normally how I work nor think) — we need to have two types of balls: a crystal ball so that we can see into the future with as much clarity as we can possibly muster; and a steel ball so that we can continue pushing through on the hard decisions we know we need to make.

Have a good 2008 year, everyone — and perhaps I can look back in my December's Chief Chat to see how well my predictions have worked out!

Sustainability categories added to House of the Year competition

Three new awards recognise excellence in sustainable building

Solar panels are an example of products used in sustainable building.

New Zealand's largest building awards programme has just become bigger, and even more focused on the country's drive to become a sustainable economy.

The Registered Master Builders Federation has announced three new awards to recognise excellence in sustainable building in the PlaceMakers 2008 House of the Year competition.

Registered Master Builders Federation chief executive Pieter Burghout says the Sustainable Building Awards are a major development for the competition, which is in its 18th year.

"We are reflecting New Zealand's desire to focus on more sustainable solutions for the built environment," Mr Burghout says.

"The addition of these award categories will ensure that the prestigious House of the Year programme continues to reflect the latest advances in building trends, keeps pushing the industry's boundaries and responds to consumer interest.

"The competition judges will consider the way in which a building company has incorporated sustainable principles in a home's design, choice and installation of materials, and the methods with which it has been built.

"The three new categories, which will be open to builders of new homes and renovations, are based on the value of the building project. They are:

- Sustainable Homes under $500,000,
- Sustainable Homes $500,000 - $1 million, and
- Sustainable Homes over $1 million.

In addition to the new Sustainable Building Awards, there has been a change to the pricing structure of the new home categories. The current $600,000 threshold has been lifted to $650,000, therefore the New Homes $450,000 - $600,000 category becomes New Homes $450,000 - $650,000, and New Homes $600,000 - $1 million becomes New Homes $650,000 - $1 million.

Mr Burghout says last year's competition was a huge success, attracting almost 700 entries, and he expects the introduction of the Sustainable Building Awards will attract even greater interest.

Entries for the Registered Masters Builders 2008 PlaceMakers House of the Year and RMB Commercial Project Awards are open at www.houseoftheyear.co.nz or www.rmbcommercial.co.nz.

All Registered Master Builders have been sent entry kits. If these haven't been received, please register online or call your local Association. Please note that entries close on Friday March 7, 2008.

What price variations?

By RMBF president
Ashley Hartley

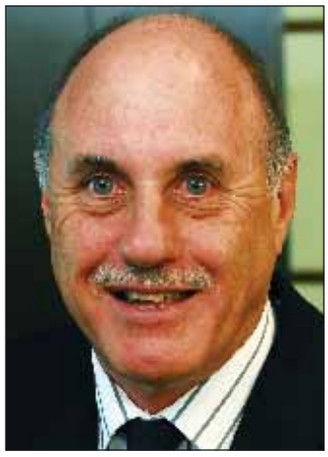

I wish you all a Happy and Prosperous New Year. I hope you are refreshed, and by now it will seem like any holiday was in the distant past.

Don't forget our annual conference is to be held in Wellington in April, and to submit your registration.

I thought I would start the year with the topic of variations. Some clients and consultants seem to believe that contractors make "heaps of money" from variations but, in reality, they can be a nightmare to administer from the contractor's point of view and, in many cases, for very little financial return.

Getting paid for variations

Variation payments may be delayed for a variety of causes, which may be caused by the payer, the payee or both. Causes may include:

- variations not promptly priced and submitted for approval,
- variations promptly priced but not claimed until final account,
- variation prices submitted without details,
- payment for agreed variations only, but no agreement on submitted prices,
- dealing with the "easy" variations first — credits are approved quickly but major variations put aside for the final account, and
- the project budget may be exceeded by variations.

Variations may involve disruption, replanning, pricing and documentation. As it is often difficult to ascertain the true costs of the changes arising out of the variation, the full costs associated with variations are seldom recovered.

The most successful projects, and the most profitable for all participants, are usually those with few variations. A high value or number of variations sometimes reflects the poor quality of the contract documents, and ineffective project planning.

Managing claims for variations

Contractors and subcontractors can improve cashflow by adjusting their variation pricing and claim procedures.

Following these basic variation management practices will help ensure that variations are promptly priced, approved and paid. Instructions should be in writing and:

- accept only written instructions that clearly describe changes,
- confirm oral instructions immediately in writing — the recipient should confirm if the person issuing the instruction does not do so, and
- avoid commencing work on variations unless the price has been agreed.

Price variations promptly

- Treat pricing variations as a high priority.
- Submit variation prices promptly, with adequate details. Use the variation submittal form on the RMBF web site (see www.masterbuilder.org.nz).
- Where an instruction does not expressly state that it is a variation, state clearly on the price submittal why the work is believed to be a variation.
- Give reasons for any different rates used, eg, where the work is carried out under circumstances different to the corresponding original work.
- Encourage the other party to discuss concerns about variations.

Authorise variations promptly

- Promptly review and approve or respond to variation submittals.
- Wherever possible obtain written acceptance of variation prices before proceeding with the work.
- Deal with differences in variation values while matters are fresh in the minds of people involved in the project.
- Refer disputed variations to adjudication.

Include variations in payment claims

- Include an up-to-date list of variations in each progress claim. Use a payment claim form, and
- claim variations progressively when priced and/or approved.

Further information regarding final accounts, adjudication and the like can be obtained by referring to the Registered Master Builders Federation *Business Best Practice* book.

This book is available for purchase through the Registered Master Builders members web site, www.masterbuilder.org.nz.

RMBF Head Office: PO Box 1796, Wellington

Ph: 04 385 8999 Fax: 04 385 8995 Helpline: 0800 269 119

www.masterbuilder.org.nz

Registered Master Builders Association Managers:

Ashburton: Nigel Smith 027 220 1377
Auckland: Sally Mehrtens 09 302 2894
Canterbury: 03 357 9469
Gisborne: Katrina Duncan 06 863 3678
Gore: Jacque Lloyd 03 208 9240
Hawke's Bay: Helen Overend 06 844 7339
Manawatu: Donna Dowse 06 353 1992
Marlborough: Richard Morriss 03 577 6638
Nelson: Karen Lane 021 749 091
Otago: Rowan Howie 03 455 5165
Rotorua: Jacki Parr 07 332 3625
South Canterbury: Trish Harris 03 684 5005
Southland: Jenny Pascoe 0274 328 065
Taranaki: David Fabish 027 448 1216
Taupo: Graeme Price 07 378 4463
Tauranga: Lani Christensen 07 577 0628
Waikato: Colleen Walker 07 853 7012
Wairarapa: Pip Dalgliesh 06 378 8008
Wanganui: Anglea Campbell 06 349 1919
Wellington: Gerald Rixon 04 381 2850
Westland: Helene Kahl 03 755 7799
Whakatane:

RMBF Regional Service Team:

John Sheriff: Auckland Central/South, Coromandel, 0274 943 192
Grant Hayes: Auckland North, Whangarei, 0272 859 516
Bob Bringans: Tauranga, Waikato, Rotorua, Whakatane, Taupo, 0274 961 050
Peter Philipsen (New Zealand Regional Service Manager): Wellington South/Central, Manawatu, Taranaki, 0274 846 207
Darryl Fawcet: Wellington North, Kapiti, Wairarapa, Hawke's Bay, Gisborne, 0274 574 146
Ian Gould (Southern Region Manager): Ashburton, South Canterbury, Otago, Gore, Southland, 0274 357 397
Peter Winchester: Nelson, Marlborough, Westland, Canterbury, 0274 722 226

Challenge and personal satisfaction a goal for young Registered Master Builder

Wellington carpentry apprentice Matt Sharp says the key to a successful career is to "love what you're doing".

The 25-year-old from Whitby, who was named runner-up in the Registered Master Builders Carters 2007 Apprentice of the Year national competition, is proof that being passionate about one's work leads to success.

Matt gained second place in the national competition after competing against nine other regional winners from throughout the country at an event in Wellington last November.

Central North Island apprentice Rhys Forsyth, 25, was first, and 22-year-old Southern region apprentice Blair Stuart was third.

Matt says he was encouraged by his employer at the time, Greg Parish, of G P Construction Ltd, to enter the Apprentice of the Year competition, a joint initiative between the Registered Master Builders Federation (RMBF), Carters, the Building and Construction Industry Training Organisation (BCITO) and the Department of Building and Housing (DBH).

"My boss pushed the idea of entering. He thought I'd have a good shot at it," Matt says. "It's a good opportunity to set yourself a standard and to judge how you're going."

After winning the Wellington regional competition in October, Matt automatically became a finalist in the first-ever national competition, held in Wellington in November.

"It was really good to meet the other guys in the national final. I've been lucky to work with a few apprentices during my training, but some guys are the only apprentices at their workplace," he says. "The national event was great too — I loved the awards ceremony."

Matt's wife Michelle and parents Pauline and John accompanied him to the awards event.

"They were quite pleasantly surprised. My parents were a bit shocked when I won the Wellington competition, and then getting second in the nationals was great," Matt says. "Everyone was rapt."

RMBF chief executive Pieter Burghout is delighted to once again be supporting the competition, which is entering its fifth year in 2008.

"The last four years have seen Apprentice of the Year go from strength to strength, and we look forward to another exciting year in 2008. The RMBF is proud to be supporting our country's future industry leaders and celebrating their achievements," Mr Burghout says.

John, Pauline, Matt and Michelle Sharp at the 2007 national Apprentice of the Year awards ceremony.

Matt was very impressed with the prize packages he received in the regional and national competitions, which included a $2000 study grant, an Outward Bound course, tools from DeWalt and Patience & Nicholson, Standards New Zealand standards, education kits from DBH, an iPod Nano and branded merchandise from Carters and BCITO.

"I use the tools every day. I didn't think I would use the battery powered skill saw, but it has been extremely useful," Matt says. "I've been using it all day on angle weatherboarding up on scaffolding. It's great not having to cart leads up there.

"I haven't decided what I'll do with the study grant yet, but it would be good to do a refresher small business course. And I can't wait to go on the Outward Bound course in August.

Fantastic prize

"It's such a fantastic prize. It really opens your eyes and pushes you to the limit. It'll be a good challenge and it will be great to see all the guys (Apprentice of the Year finalists) again."

Matt, who began his carpentry apprenticeship after completing a Bachelor of Commerce at Victoria University, says his family were very encouraging when he chose to begin a career in the construction industry.

"My Grandad's a builder and Dad's a plumbing tutor and had done a bit of general building maintenance-type work, too."

Matt is also quick to encourage more young people to choose a career in the trades.

"It's hard trying to work out what you want to do in life. At school I was encouraged to go to university because I had good grades. I think it's sad that more people aren't encouraged to enter the trades — it can be frustrating, but very rewarding, work. Fortunately the money is getting better in building now."

Real stepping stone

Matt, who is now self-employed and is also building a house for himself and Michelle in Whitby, says his Apprentice of the Year success was a real stepping stone in his career.

"Industry leaders throughout the region pick up on things like this, it opens doors," Matt says. "I'm sure it will help out with my career goals.

"In the immediate future I would like to have our house finished by April. After that, I've got enough work to last me until the end of the year, which is good. Running out of work is a big worry when you're self-employed."

In the long term, Matt says he would like to enter the House of the Year competition.

"It would give great personal satisfaction, and be a real challenge. After all," he adds, "isn't that what being a Registered Master Builder is all about?"

For more details about the 2008 Apprentice of the Year competition, see next month's edition of *Building Today*.

HOY profile

RMB 2007 Commercial Project of the Year

Restful ambience a credit to

Mainzeal Construction South Island operations manager Graeme Earl says winning both the RMB 2007 Commercial Project of the Year and the Health Project Award for the new Burwood Hospital Surgical Services Unit was well-deserved recognition for his team.

Perseverance has certainly paid off for the company, which has entered the prestigious awards for the past seven years but never pulled off a big win.

The new unit at Burwood consists of four elective orthopaedic surgery theatres, a sterilisation unit, a 16-bed pre-op and recovery area, a 12-bed special care unit and a 30-bed surgical ward.

The key design requirement was the need for efficient patient flow in the unit, which replaced three small, outdated operating theatres and ancillary areas built in 1963.

The highly specialised new facility was designed by Sheppard and Rout Architects of Christchurch and Klein Architects of Auckland in consultation with Burwood's clinical staff.

The unit has four state-of-the-art operating theatres and recovery areas, and ensures that Burwood Hospital can better meet its patients' needs and make their comfort a top priority.

In-patient areas in the mainly single-storey design have a domestic feel with plenty of natural light and bedrooms opening on to planted courtyards.

Double-glazed windows are energy efficient, and sound-proof and durable materials, including precast concrete panels and brick, ensure the unit's exterior will be low-maintenance.

The need for patient flows to be as logical and efficient as possible determined the layout of the facility, so patients could have a better experience in hospital, staff could process them and handle equipment more efficiently, and theatre throughputs could be maximised.

A dedicated entry with parking directly outside, wide theatre corridors, automatic doors and open-plan pre-op and recovery areas all helped to achieve this.

Mainzeal Construction won the project in a tender process which took nearly five weeks at the end of 2005.

"We actively pursued this contract," Mr Earl says. "We were up against four others for the job. It wasn't just luck — we really wanted this job."

Mr Earl says the final product did not differ too much from the original plans. "There's always going to be slight variation but, ultimately, nothing major changed.

"When we began the project, my first thought was 'Yee-hah'!" Mr Earl says. "I was very happy. It was a very complex and intricate job with a huge quantity of services involved.

"The complex building has several specialised services, including medical gases, HEPA-filtration, humidification and provision for a large amount of clinical equipment installed separately by the client.

The project began in January 2006 and took 14 months to build, and was completed on time despite some of the worst winter weather in Canterbury for decades.

"The biggest challenge we faced was definitely the 45 days of inclement weather. We managed to work around it, but there was a lot of down time for the builders," Mr Earl says.

Another challenge the team faced was that the hospital was fully operational during construction — no mean feat with up to 80 people onsite at one time, including Mainzeal's management team, labourers and subcontractors.

Mainzeal

Mr Earl says the Mainzeal construction team overcame any challenges with one word: "Teamwork!"

The onsite crew ensured the construction did not adversely affect the running of the hospital by liaising with staff over temporary service shutdowns, and preventing construction dust and noise from becoming a problem.

The competition judges commended the construction team for successfully pulling together the building's complex elements, and ensuring the hospital was fully operational while building was in progress.

"The workmanship is remarkable and the property has a very restful ambience with lots of natural light. It's a credit to the construction company and an asset to Christchurch and New Zealand."

Mr Earl originally got into the building trade with the encouragement of a teacher at school in North Canterbury.

"The teacher's husband was a builder, and she suggested it might be something I would enjoy," he says. "I chose to go the commercial way back when I was an apprentice builder."

Mr Earl has been working for Mainzeal for 15 years. "I started as a foreman and have moved my way up to South Island operations manager."

His favourite projects over the years with Mainzeal have been on retail shopping malls. "I really enjoyed working on The Palms, and Westfield Riccarton," he says.

"We're hoping to get a retail job at Richmond which would be a huge job — probably two or three years."

After last year's success, Mainzeal Construction will definitely be entering the RMB Commercial Project Awards again this year.

"We are looking forward to entering the 2008 competition. We've got the Community Canterbury Charity Hospital to enter in the commercial and health categories, and we are actually entering a residential property this year too — a $2.5 million house."

Mr Earl says entering the RMB Commercial Project Awards and House of the Year is about "recognising our people, our achievements and the quality workmanship we do".

"It was fantastic for the team to finally be recognised as leading commercial builders and to be proud of their great achievements."

Registered Master Builders Federation Conference 2008

Keeping it Real

24-27 April 2008, Duxton Hotel, Wellington

Don't miss out on the industry conference of the year and the chance to:

- **Catch up with fellow members and share knowledge**
- **Listen to our fabulous guest speakers**
- **Learn about new products at the Trade Expo**
- **Enjoy fantastic social functions**

Register now either through the members' section at www.masterbuilder.org.nz or contact Marie Clark at Laker House of Travel on 03 214 3500 or mariec@hot.co.nz.

Registration closes 24 February 2008

Building Excellence For Over 100 Years

Land costs the major driver in reducing housing affordability

Increasing section prices have been the major factor in reducing housing affordability over the past decade, according to a recently released report from the BRANZ Group.

The Changing Housing Need study undertaken by Ian Page, economics manager with BRANZ Ltd, and funded by Building Research, included an analysis of the impact of the key drivers of housing affordability.

The report concludes that the major factor impacting housing affordability has been section prices, which were ahead of interest rates and the cost of new house construction.

"Housing affordability has fallen markedly since 2001 due to a number of factors," Mr Page says.

"The fact that average wages have only increased by an average of 2.2% per year over the past decade has exacerbated this trend. The rising cost of land, with sections increasing by an average of more than 14% per year over the past five years, has been the major contributor to the decline in housing affordability.

"The following table shows the relative impact of each factor on housing affordability.

New housing affordability parameters				
	Percentage annual change		Percentage annual change to 2017	
	Last 5 year average	Last 10 year average	Expected	Optimistic
Average Wages	2.7	2.2	2.5	4.0
New house construction costs	6.6	3.9	3.5	2.5
Section prices	14.3	10.9	7.0	5.0
Ave interest rate %(over period)	8.26	8.40	At 2016 7.0	6.0

Note: These figures show the average increase per annum and have compounded over these periods.

"Given that home ownership has also fallen over the past 10 years, we believe it is reasonable to assume that there is a relationship between housing affordability and home ownership.

"Home ownership has been declining and was down to 66.9% in the 2006 census. Tenure and new housing affordability are shown in the graph below which indicates downward trends from 1996 onwards.

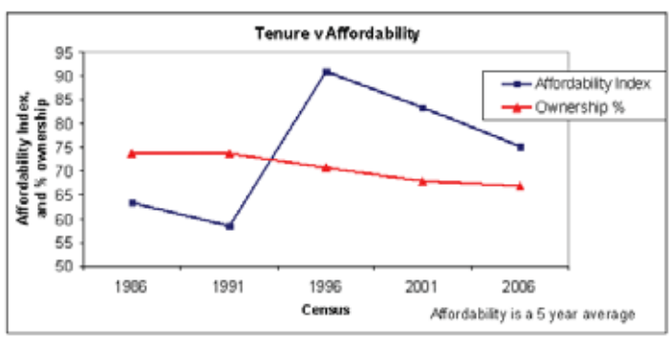

The study also tracks new housing affordability in an index* since 1970 (see graph below).

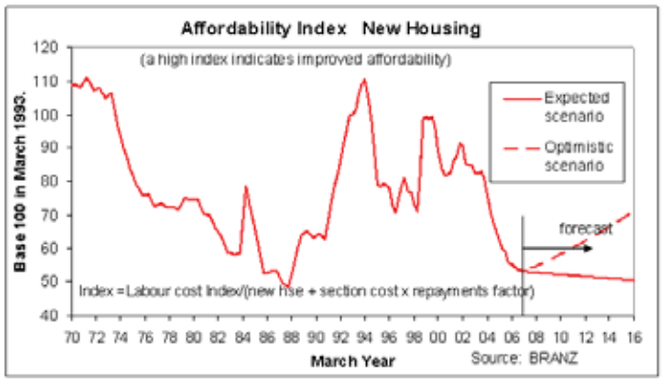

Note: The above graph is for new housing affordability, but the author notes that the affordability of existing housing has followed a very similar pattern since 1993.

Between 1993 and 1998 wages rose around 9% but construction costs rose 30% and interest rates increased by around 1%. This caused affordability to fall over this period.

In 1998 the increase in affordability was mainly due to a fall in mortgage rates from around 11% to 7%. Since 1999 affordability has declined markedly due to increasing section prices, construction costs and home lending interest rates. The report provides two sets of forecasts which depend on the assumptions made for growth in incomes, new housing construction cost changes, land prices and interest rates.

The "expected" scenario indicates a flattening out of affordability, and is based on modest wage growth, lower rates of increase for construction and land costs, and a slight reduction in interest costs.

With the "optimistic" scenario, wage growth is quite high while house and land price escalation is relatively low, and the interest rate for home lending (6% in 2016) is 3% below current rates.

"Should these factors come into play, housing affordability could improve. However, when we look at what factors have contributed to housing becoming less affordable over the past decade and, particularly, the past five years, we can conclude that relatively low wage increases and escalating land prices are the two most important factors.

"These are followed by the cost of funding and then the cost of new house construction," Mr Page says.

A copy of the report, Changing Housing Need can be downloaded from the BRANZ web site: see www.branz.co.nz/branzltd/bookshop/info.php?ask=free&idnum=1666.

* The affordability index is a ratio of a wage index divided by a new house cost index and a financial factor index:

- The wage component comprises all industries all occupations' wages/salary, including overtime;
- The new house cost is a combined new house cost index and a real section price index.
- The house cost index used is the Capital Goods Price Index (housing). For the section the QVNZ section price index is used. The two are combined into one index using a varying weight between the section and house construction costs.

The financial factor is the annual capital recovery factor for a 20-year term, and uses the floating house mortgage rate.

To stay on top of your KiwiSaver employer obligations, just give it 1%

Sometimes, what looks like a little can mean a great deal. And if you're an employer, just contributing 1% in the first year to an employee's KiwiSaver account or complying fund will make a big difference. **From 1 April 2008,** employers will need to contribute 1% of what their employees earn, increasing by 1% each year to a maximum of 4% in 2011.

And as long as it's mutually agreed, an employer can also help their employees reach the minimum 4% contribution until 31 March 2012. But you won't be doing it alone; the government will come to the party with a tax credit of up to $20 a week for each KiwiSaver member to help offset this. What's more, if you're already contributing towards an existing superannuation scheme for your employees, you may be able to offset the KiwiSaver contribution, subject to terms and conditions.

We've sent you a revised Employer guide with all the information. If you haven't received it, call **0800 257 773** or visit **www.ird.govt.nz/kiwisaver** for more information.

Terms and conditions apply.

Inland Revenue
Te Tari Taake

New Zealand Government

KiwiSaver
Poua he Oranga

TTT 8017

Building Research chief executive to resign

Organisational management skills have been a big asset

Building Research Association chief executive Dr Sunil Vather is to step down from his leadership role after two years.

His resignation is effective March 31, 2008, and came as a surprise to the Board.

Dr Vather joined Building Research from Industrial Research Ltd, where he held the position of General Manager of Science Strategy and, prior to that, General Manager of Operations.

Before to his move to New Zealand, he was employed at AECI Ltd and University of Cape Town in South Africa.

Dr Vather has guided the Building Research organisation through a period of considerable change and development.

His extensive background in academic science, business development and organisational management have been strong assets in this process.

Among his significant contributions were his role, with his team, in the establishment of Greenbuild Ltd, the Structural Timber Research Company, support of noteworthy conferences and linkages with best practices among international organisations.

Dr Vather has guided the Building Research organisation through a period of considerable change and development.

He has also provided Building Research with greater transparency and accountability through a robust process of allocating and leveraging the $10 million industry levy with BRANZ, and through a number of significant alliances.

Dr Vather says he leaves with confidence in the ability of Building Research to continue to grow from strength to strength.

"I am now looking forward to engaging with further leadership challenges," he says.

Contributed significantly

Board chairman Graham Coe says Dr Vather has contributed significantly to the strategic development of Building Research over the past two years whilst the organisation has gone through a major phase of realignment.

"His commitment and his integrity have been outstanding. Sunil is able to leave knowing that his efforts have led to increased stabilisation within the industry and an enhanced focus on the importance of the public good.

"The Board of Directors is confident that Dr Vather will continue to achieve ongoing success in future leadership roles, and wishes him well for the future," Mr Coe says.

Low building consents figure a bad omen for first-time home owners

Consent figures for new houses in December 2007 were the lowest December total since 2001

The latest building consents statistics for December 2007 are another indication of New Zealand's deepening housing affordability crisis, Registered Master Builders Federation chief executive Pieter Burghout says.

The figures indicate that the residential market is softening considerably in terms of new homes being built, while the commercial market is staying relatively strong.

The 1738 building consents for new houses issued in December 2007 was the lowest December figure since 2001, although the 25,544 consents issued for all of 2007 was similar to the totals for 2005 and 2006.

"The Reserve Bank's efforts to dampen down the housing market are clearly working, with fewer houses being sold, and fewer houses being built," Mr Burghout says.

Exacerbating the crisis

"However, this could exacerbate the housing affordability crisis — as the supply of new housing dries up, house prices will rise. This is not what people trying to get into the housing market will want to see happen," he says.

"New Zealand needs to be building more than 30,000 houses a year, not 25,000, and such an increase in the supply of new homes would be a major factor in making housing more affordable."

Unprecedented $12 billion

The value of new consents issued for residential and commercial building was just shy of hitting an unprecedented $12 billion for the year — at $11,938 million — showing how significant an economic driver the construction industry is for New Zealand.

Mr Burghout says he expects the number of new residential building consents for 2008 to be roughly similar to last year, or down by about 1000.

"We are expecting a slightly softening residential market, a steady, if not slightly stronger, commercial market, and a very strong infrastructure market.

So 2008 will still be a busy year for Registered Master Builders."

Mr Burghout is forecasting an upturn in the industry in 2009, particularly in the residential market.

Mobile unit brings H&S solutions to construction businesses

Mobility can ease time pressures on construction companies

Smart Kiwi workplaces are keeping employees safe and saving valuable time in the process thanks to an innovative approach to helping health and safety compliance.

Wormald's Mobile Safety Vehicle has filled a gap in the marketplace and could help meet the health and safety needs of construction businesses in Auckland, Wellington and Christchurch by bringing solutions to the workplace, rather than employers needing to travel and purchase off-site.

The Wormald Mobile Safety Vehicle contains a comprehensive range of safety products and accessories, including fire equipment, breathing apparatus, personal protective equipment and spill control products.

The onboard specialist helps the business make informed choices that provide solutions for each workplace's specific health and safety requirements.

Wormald general manager Keith Blind says the Mobile Safety Vehicle's convenience factor — with a one-stop-shop interactive approach that allows businesses to view, order and receive certain products without leaving the site — is a huge plus, and meets a genuine need by relieving time pressure.

"We've been delighted with the response to this initiative, which confirms the strong interest businesses have in the safety and well-being of their staff and customers," Mr Blind says.

"We know that keeping employees safe at work is not just an obligation, but a responsibility.

"We're helping small and medium-sized businesses, schools and organisations such as laboratories do this, and in a very practical way we have helped them overcome a major hurdle — the time to do everything they want to do."

"The interest these vehicles are getting shows businesses care about health and safety, but face the real barriers of time pressure, accessibility, inconvenience and the chance to make informed decisions. This Mobile Safety Vehicle overcomes those barriers."

The fleet of Mobile Safety Vehicles is available to visit workplaces in Auckland, Wellington and Christchurch.

The vehicles carry a range of products and accessories, and aim to turn around most orders within 24 hours.

Stylish outdoor ideas that give you the edge

At Stevenson, we know you work hard to impress your clients. So to make life a little easier, we have the latest and most comprehensive range of hardscaping products. Paving, retaining or masonry blocks in all the colours, shapes and sizes to suit any job, big or small. More importantly you'll find them all with one stop or one call. So tap into our knowledge and experience and get the best solutions to give your next project the edge.

www.stevenson.co.nz

STEVENSON

$13 million refurbishment project completed at Queenstown hotel

A $13 million refurbishment at Queenstown's iconic Novotel Gardens Queenstown hotel has been completed on time and on budget.

Queenstown registered master builders Rilean Construction handed over the final 50 rooms of the major 16-month project in December last year.

Novotel Gardens Queenstown is now the largest hotel property in the tourism resort, with 273 rooms catering for up to 546 guests — a 34% increase in potential guest numbers.

General manager Carl Braddock says he is absolutely delighted with the end result and with the professionalism shown throughout by Rilean, which worked to a careful plan enabling the hotel to continue operating as various wings of the building were refurbished.

The first stage of development began in October 2006 with construction of 20 new rooms above the existing Church Wing. This stage was completed in March 2007.

A similar expansion of the Earl and Horne wings began in April 2007, and included the renovation of public areas as well as the bar and restaurant.

Rilean senior project manager Trevor Meikle says the project involved the tightest timeframe he'd ever had — "eight months to do the first wing and six months to do the other two wings, so it's a big pat on the back to all the subcontractors and a real milestone for us," he says

Mr Braddock says to get to the end of 16 months of complex construction on a "working" building, let alone a hotel, is a massive undertaking.

"To everybody's credit, we have all emerged unscathed. Relationships between suppliers, the builders and the hotel, which you might expect to be tense, have gone really well," Mr Braddock says.

"At the end of the day guests have been remarkably happy and a quality product has been delivered to the four-star market," he says.

"Not only do we now have the biggest hotel in Queenstown, but it is also the biggest Accor hotel in New Zealand.

"We have 69 brand new rooms, 204 completely refurbished rooms, a 66-seat restaurant extension, a stylish new lobby, brand new gallery bar and new-look meeting room, all in the best location in Queenstown."

Rilean Construction senior project manager Trevor Meikle (left) reflects on a job well done with Novotel Gardens Queenstown general manager Carl Braddock.

Mr Braddock says the refurbished property will add 220 beds to the Queenstown hotel market, and will employ an additional 20 staff.

The Accor hotel company bought the property in 2003, and Mr Braddock says the $13 million upgrade has been carefully thought through.

"The company saw the potential in the market to add more rooms and improve infrastructure, capitalising on our unique location right on the shores of Lake Wakatipu," he says.

But he says the upgrade is about much more than improved rooms and services.

"It is about the real sense of pride that I see now among staff as they go about their business," he says.

Flashman. The “Rolls Royce” of weather tight flashing systems for doors and windows.

Years of inspecting issues with leaking buildings inspired the design of the complete Flashman powder coated, extruded aluminium window and door flashing system. At least 50% of leaks occur at window and door openings largely due to product design and installation issues.The Flashman system includes the traditional principles of Deflection, Drainage, Drying and Durability with one added benefit-Do-ability.

The BRANZ appraised Flashman system:

- ❑ Is compatible with a wide range of claddings
- ❑ Is engineered with precision
- ❑ Fitted by Flashman installers
- ❑ Designed for NZ weather extremes
- ❑ 10 year warranty
- ❑ Is competitively priced
- ❑ Made in NZ

Flashman systems are patented in Australasia, USA, Canada and Europe

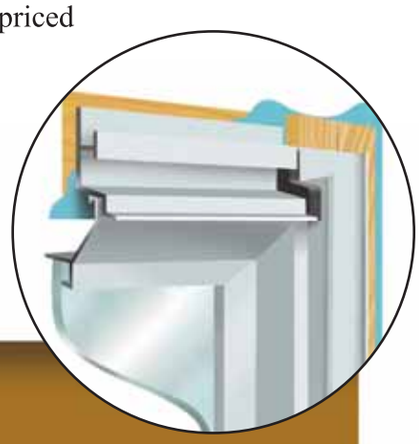

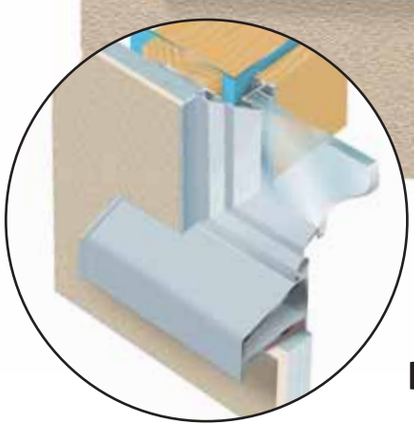

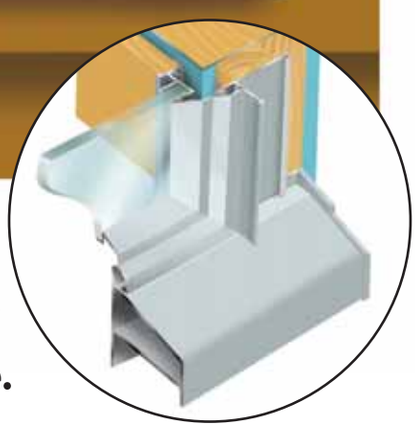

BRANZ Appraised
Appraisal No 573 120071

Flashman Flashing systems Ltd.
Phone: 0800 55 66 00 Fax: 03 327 22 72
Website: www.flashman.co.nz

Distributor Enquiry Welcome.

Contact: Mike@flashman.co.nz

Minister says good air ventilation is .

But Mayor says Building Code standards are 'gold plated!'

Building and Construction Minister Shane Jones says extractor fans are not compulsory, but it makes common sense to ensure good ventilation in new houses.

Whangarei mayor Stan Semenoff has been quoted as saying: "The Building Code says you must have an extractor fan in the kitchen (for a new house). No one ever died when we were kids from the smell of bacon and eggs being cooked."

He is also reported as saying that the Building Code standards are too high and are "gold plated".

"Mayor Semenoff might have been trying to emphasise his frustration with the building code, but the fact is you do not require an extractor fan, but you require proper ventilation as a health precaution, and that is just common sense," Mr Jones says.

"Proper ventilation is essential to minimise the health risks to people from mould because of moisture from respiration or cooking. There is also the risk of a lack of oxygen without adequate ventilation."

The Minister says the Building Code is not a "gold plated standard" but a set of practical standards designed to ensure New Zealanders live in good, well built houses without compromising their safety or health.

"The Building Code has performance requirements, which include spaces within buildings having a means of ventilation with outdoor air that will provide an adequate number of air changes to maintain air purity, and that buildings have a means of collecting or otherwise removing (among other things) cooking fumes and odours from the space in which they are generated," Mr Jones says.

These requirements date from 1992 when the Building

Building and Construction Minister Shane Jones

s just common sense

Code was first issued as a regulation.

The Acceptable Solution G4/AS1 provides an approved means of complying with the ventilation requirements of the Building Code.

For houses, natural ventilation of occupied spaces can be achieved where the area of openable windows and other openings is no less than 5% of the floor area.

For most houses natural ventilation through windows is the obvious and most practicable solution. The Acceptable Solution G4/AS1 also provides a solution for mechanical ventilation (such as an extractor fan) where natural ventilation is not possible.

Designer flexibility

"The designer has the flexibility to choose to provide natural ventilation (as above) or mechanical ventilation, or a combination.

"The designer also has the flexibility to specifically design for ventilation, provided the performance meets the Building Code requirement to maintain air purity," Mr Jones says.

"The recent review of the Building Code identified that the expression 'adequate' was not specific, and could lead to problems with interpretation.

"It does not provide a clear statement of the required air purity. The review recommended a change to the Building Code to clarify what is meant by adequate air quality, based on health criteria," Mr Jones says.

"This change will provide clarity for specific design, and enable designers and Building Consent Authorities to be clear about the solution being proposed which complies with the Building Code.

"It is a criteria which the New Zealand public should be pleased about, because it spells out the need to ensure quality in buildings and housing construction.

"I also welcome any constructive solutions Mr Semenoff may have in regards to all the issues he has raised, and I look forward to discussing them with him soon," Mr Jones says.

Register at www.buildingtoday.co.nz now and be in to win great prizes and giveaways every month!

Eden Gate Automation

A division of Eden Hardware Group Ltd

Fadini Strabuc Rising Bollard

Fadini and Aprimatic Gate Operators
Fadini Traffic Barriers and Bollards
Videx Entry Systems

Showroom: Harold St, Mt Eden, Auckland

web site: www.edenhardware.co.nz

P O Box 108 171, Symonds St, Auckland
Phone 09 638 8278 Fax 09 638 8588
e-mail: edenautogates@clear.net.nz

HOLDFAST Right First Time!

Innovation Plus Imagination

... what ? NO RISK !

BRANZ Appraised Appraisal No.575 (2007)

GORILLA Gorilla Grip

NOW BRANZ Appraised!

Gorilla Grip® and Gorilla Grip® Express are multi-purpose, high performance construction adhesives which are now BRANZ appraised.

We have done the tests for you! The BRANZ appraisal provides reassurance that Gorilla Grip® 2 Hour Cure and Gorilla Grip® Express 1 hour Cure (Cert.575) are products that can be trusted. ***No Risk construction!***

Gorilla Grip® and Gorilla Grip® Express are polyurethane based adhesives which cure transparent, and can be used for interior or exterior applications.

Gorilla Grip® and Gorilla Grip® Express are the best wallboard adhesives for durability and strength. These adhesives are completely waterproof and also stick to damp surfaces. This is a major advantage and should be a necessity in every tool kit.

The technology used means it has excellent all round adhesion to a wide variety of substances, including timber, concrete, polystyrene, metal, brick, and stone; it has also been tested to successfully stick to LOSP timber.

www.holdfast.co.nz

Mastering the practical implications of building and construction law

The 6th Annual Building & Construction Law, Disputes & Contract Management Conference — being run by Conferenz, New Zealand's leading business conference experience — is to take place on February 25 and 26 at Rydges Hotel in Auckland.

Attracting corporate level decision makers from the construction industry, the conference will provide details coverage, analysis and practical guidance on:

- Building Act 2004, Construction Contracts Act 2002 and the Building Code,
- contract management, techniques and systems,
- project management — accounting for legislative and regulatory impacts,
- risk and liability — mitigation, management and allocation,
- collaborative working arrangements and project alliance contracting, and
- dispute resolution.

The following column is by Jonathan Kaye, a public law consultant and principal at Jonathan Kaye Law, who will be speaking on risk and liability.

His presentation will provide an overview of the risks for different participants in the construction industry by drawing on examples from recent cases.

While some construction professionals may consider that once their weathertightness liabilities are behind them their worries will all be over, the reality is quite different.

Buildings are becoming more complex, products are becoming less tolerant of errors in application or use, and owners and occupiers are becoming more demanding of the amenities their buildings must provide.

The liability rules for construction professionals are a harsh reality that few can avoid, and the incorporation of a limited liability company will not generally protect a builder/director who undertakes building work.

While a number of construction professionals carry professional indemnity insurance, it is not the norm among builders or specialist sub-trades, and thus successful claims against them will have a much greater impact on their businesses and lives.

Many risks during construction are easily identifiable and able to be managed.

However, risks that concern the interrelationship of different products or overlap between two professions or areas of expertise can be much more difficult to identify.

Potential liability may arise from something as small as the subtly different use of a tried and tested product.

Such a risk may not even be apparent to an experienced professional or building practitioner.

In addition, the application of the liability rules developed by the courts can seem unfair as they are designed to recompense the owner of the building as opposed to ensuring a fair apportionment of responsibility among the relevant construction professionals.

For example, full liability will be carried by a single party when the other parties involved in the construction of the building are no longer in existence to share that liability.

• Mr Kaye's presentation will identify some of the risks that commonly become liabilities, and some of the ways in which these risks and liabilities can be managed.

If you have any queries or would like any further information on risk and liability please contact Jonathan Kaye at jonathan@jonathankayelaw.co.nz, or phone 04 499 9465.

building today

The official publication of the 6th Annual Building & Construction Law, Disputes & Contract Management Conference

Lowery™
CONCRETE CUTTING AND DRILLING

NZ's Largest Cutting & Drilling Company

Call us for all concrete cutting and drilling work

Residential • Commercial • Civil

- Rapid Response
- Nationwide Service
- Professional Advice
- Competitive Rates

Call us today to book a job or for a free appraisal

Wellington – Ph: 04 972 1279 • **Auckland** – Ph: 09 414 5050
info@lowery.co.nz www.lowery.co.nz

THIS IS OUR IDEA OF AN IMPORTANT MEETING...

If you want balance in your life and to find more time for the things that are important to you, consider a business opportunity as a Franchise / Licence Holder with Latitude Homes.

A leading housing company that specializes in helping NZers realize their dream of owning their own home is offering a lifestyle opportunity to the right entrepreneurs.

If you want to own a business that is exciting, well supported and profitable – and where you can choose your own lifestyle, visit Latitude Homes online for more information.

LATITUDE HOMES

www.latitudehomes.co.nz/joinus

LAH158-BT

Screw Fixed

LUMBERLOK® FLEXIBRACE

- Complies with NZS3604:1999 Section 8
- Eleven configurations quick and easy to install
- Achieves excellent bracing units in restricted wall spaces
- Eliminates need for plywood sheathing
- Can be used in conjunction with 10mm Gib® Standard plasterboard or as stand alone brace system
- Can be retro fit to wall panel

Available through leading Building Supply Merchants throughout New Zealand

MiTek™ **MiTek New Zealand Ltd.**

HOME OF **GANG-NAIL®** BUILDING SYSTEMS

www.miteknz.co.nz

New ratings system makes energy efficiency visible in homes

The Home Energy Ratings now available to New Zealand home owners will, for the first time, make the energy efficiency of a home easily visible and measurable, Energy Efficiency and Conservation Authority chief executive Mike Underhill says.

A home energy rating is an independent assessment of the energy performance of a home, expressed as a star rating. The assessment also includes recommendations about the most cost-effective ways to improve the home's energy efficiency and reduce energy costs.

Mr Underhill gave two examples of assessments — a renovated 1930s house rated three and a half stars, and a new home rated five stars.

"These show how the home energy ratings will give home owners, and home buyers, an easy-to-understand measure of energy efficiency."

The older house is a 1930s stucco brick bungalow in Point Chevalier, Auckland, with a recent extension. The home's extension has many good features that bring the home's rating above average compared to houses of a similar era.

The assessment process identified some areas for further improvement, particularly in the older part of the house where insulation levels could be improved.

The assessment report gives a list of recommendations that would increase the star rating, with the potential to reach six and a half stars with full insulation and double glazing on all windows.

Home owners Matt and Megan say the assessment has been useful. "It's been good to sit down with someone who knows what they're talking about and can tell you which things make the best sense cost-wise and are actually going to make a real difference to your power bills."

A sample assessment of a new home rated a timber-framed, two-storey show home, with wood and plaster cladding, at five stars.

"The five star rating is good. To get an extra star, the house would have to be better oriented on the section to maximise passive heating from the sun," Mr Underhill says. "To get to seven stars, the house would need double glazing and fewer and smaller windows on the east and west.

"This highlights the value of getting an assessment at the design stage, while it's still possible to adapt the plans," he says.

RMBF chief executive Pieter Burghout says the Federation supports this programme because it will help builders validate to their clients that they build quality homes that meet consumer demand.

"New Zealanders need to know how their homes stack up energy wise — and once they know, they will also need to know how to redesign their proposed new home or fix their existing home, should they want to do so."

$MARTER INSULATION FOR BETTER LIVING

New insulation requirements mean homes will be:

- warmer and healthier
- cheaper to run
- kinder to the environment.

A free booklet, *Your Guide to $marter Insulation*, is available at www.smarterhomes.org.nz or www.dbh.govt.nz

You can also email info@dbh.govt.nz or phone 0800 242 243 for copies.

Department of Building and Housing
Te Tari Kaupapa Whare

everyone can have sustainability .govt.nz

New Zealand Government

New Zealand Steel allows you to express your creativity like nothing else. This uniquely inspiring material dares you to go beyond the expected, to set entirely new parameters of form and function. Made entirely in New Zealand, from the unique black sands of the North Island's wild west coast, New Zealand Steel infinitely flexible and 100% recyclable. Add to that our unrelentingly high standards, and you'll understand why COLORSTEEL® pre-painted steel and Zincalume® steel is the choice of innovative builders and architects.

New Zealand Steel, the possibilities are infinite.

New Zealand Steel Limited, Private Bag 92-121, Auckland Ph: (09) 375 8999 www.nzsteel.co.nz

COLORSTEEL® & Zincalume® are registered trademarks of New Zealand Steel Limited.

25 years THE ROOF OF NEW ZEALAND® COLORSTEEL®

Zincalume®

NEW ZEALAND STEEL

Sustainable building — more t

The world has changed since the three little pigs first set up house — building materials and methods are different, and the wolf at the door is much fiercer. Enter sustainability, now at the top of business, political and social agendas. Jenny Baker reports.

It is universally agreed that focused sustainable living is now imperative to the survival of the human race.

Population growth in the past 50 years has put huge pressure on natural resources, resulting in environmental degradation, notably through climate change.

Everything and everybody on Planet Earth are equally vulnerable to the effects of climate change, and mankind must work together to shrink the collective human carbon footprint back to a sustainable size.

The construction sector is a vast, visible yet essential resource consumer and, therefore, potentially a key player to set the tone for other industries in this respect, according to New Zealand Steel market manager Chris Kay.

"It's important that everybody in the sector, in particular specifiers, understands the principles of sustainable building and the caution required when making comparisons between different materials," he says.

When specifying a "smart" or "green" building, both the energy embodied in the building itself and the operational energy requirements of the building's users must be taken into account.

Definitions

New Zealand web site SmarterHomes defines sustainable building as " . . . it meets present needs without compromising future needs. A building material is unsustainable if it is extracted and used in amounts that will cause it to run out in future. It is also unsustainable if its use causes environmental harm that will be difficult or impossible to repair."

Sustainable building practices result in a smart building: "A smart home is . . . designed, built or run in a smart way. A smart home is warmer, drier, more comfortable with more natural light; safer; cheaper to run, with lower fuel bills; healthier for you and your family; great to live in; easier on the environment. Being smart doesn't have to cost you more, and can save you a great deal," the web site says.

Construction industry role players face the challenge of quantifying the total energy used over the life of a certain building material in real time and then evaluating it in the qualitative framework of the building's future maintenance requirements.

Beacon Pathway's NOW Home in Rotorua, showing the north-east corner of the house. The house is Beacon Pathway's second live sustainable building research project. It has maximised north-facing windows, passive cedar louvre venting, and features Colorsteel Endura Grey Friars cladding.

Image courtesy of Craig Robertson Photography for Beacon Pathway Ltd

"Total energy" refers to the energy used to extract, process and transport it to building sites, the energy used to build with it, and the energy used to dispose of it at the end of its life. This is called the building's embodied energy.

The people who will use the building have ongoing energy requirements, too. This is called the building's operational energy, often referred to as the building's future-proof qualities.

The idea is to find the optimum level where the two types of energy work together for maximum sustainability of the building in the long term.

Making comparisons

It's a wide scope — but there are tools to help the building professional do the job of optimising the sustainability of a building. One such tool is life cycle analysis.

Another is the New Zealand-developed Home Energy Ratings system, launched by the Energy Efficiency and Conservation Authority (EECA) in December last year.

SmarterHomes describes life-cycle analysis as considering "the total environmental impact of a material or product through every step of its life — from obtaining raw materials, for example through mining or logging, all the way through manufacture, transporting it, using it in the home and disposal or recycling".

It factors in a building's embodied energy but also considers the environmental impacts of manufacturing a building, such as depletion of resources, chemical degradation, energy and water use, greenhouse emissions, waste generation and toxicity to people and the environment.

ISO14040 governs this complex process, widely considered to be the most comprehensive way of understanding a building's full environmental impact. However, New Zealand-based life-cycle analysis data is not yet widely available.

The Home Energy Ratings system focuses on quantifying the operational energy requirements of a building, making the energy efficiency of a home visible and measurable.

It is an independent assessment of the energy performance of a home, expressed as a star rating, with the potential maximum of six and a half stars.

to it than meets the eye

The assessment includes expert recommendations about the most cost-effective ways to improve the home's energy efficiency and reduce energy costs, and to maximise the star rating.

EECA is now training assessors and will monitor the effectiveness of the programme.

Making choices

Meanwhile, Mr Kay says it is important for building professionals to understand how to make sustainable building choices, as it is easy to inadvertently compare apples with oranges.

He actively advocates approaching sustainable construction via a comprehensive life cycle assessment.

"Many building products are compared on a cradle-to-gate approach, which only looks at green credentials of the building material to the factory gate.

"To quantify the true impact on the environment of a given product or service throughout its lifespan, a cradle-to-grave approach is required or, even better, a cradle-to-cradle analysis which takes into account a material's ability to be recycled into a future use," he says.

"In addition, merely calculating embodied energy is very difficult as there is no standard for doing it, and the modeller can choose what to include and what to exclude, making direct comparisons difficult.

"In this respect, the durability of a material is important. If a product with half the embodied energy of an alternative has to be replaced four times during the life of the building compared with no replacement, then selecting the low embodied energy product would not necessarily minimise the impact of the building.

"Also, keep in mind most figures are quoted for a mass of material. However, in buildings, square metres or lineal metres are more relevant," he says.

The energy consumed by the occupants of the building is another issue to be considered. It may, for example, be justifiable to use a material that is higher in embodied energy, such as insulation, if it reduces overall heating or cooling energy consumption in the building.

Mr Kay encourages a close look at the credentials of the building material itself, as well as the credentials of the material's sector and manufacturer.

The specifier may, for example, ask questions relating to the strength-to-weight ratio of the material, its recyclable properties, and the sector and local manufacturer's policies and reputation in respect of sourcing materials, subsequent rehabilitation practices, waste generation, recycling and disposal, and electricity and water use and conservation.

My way . . . or the highway

SmarterHomes points out building industry professionals who understand the concepts of sustainable building have a definite advantage over those who do not.

It says demand for building professionals with knowledge of, and skills in, sustainable design and building will increase as consumers become more informed and insist on green, or smart buildings. Manufacturers will respond with smarter products and technology.

Treating a building as an integrated system from design stage will certainly save costs and tip the scales in favour of sustainability, and a building professional has to stay ahead, or possibly lose customers.

The web site emphasises "local and central government are increasingly requiring sustainability to be considered when a home is being designed and built. These requirements will increase following the Building Code review.

"Builders who understand sustainable design and building practices now will be better positioned to deal with future changes in compliance requirements."

Also, international research suggests resale values for low-energy homes are much higher than for other homes.

"This stands to reason," the web site explains, "as smart homes are better to live in" — and in a consumer gratification-focused world this is perhaps the most persuasive argument of all in favour of sustainable building.

Beacon Pathway's NOW Home in Waitakere. The house is Beacon Pathway's first live sustainable building research project. It shows the north face of the house, which contains all the living areas and the maximum possible window area. The solar hot water panel on the roof provides 55% of the hot water for the house. The Waitakere project is almost finished and is leading to a more ambitious NOW 100 project, which will be 100 sustainable houses around New Zealand, working with group builders and developers.

Image courtesy of Craig Robertson Photography for Beacon Pathway Ltd

**** Sustainability Pt 2 in* Building Today *March:***

What are the sustainability credentials of steel as a building material, how smart is the resulting building and how does steel as a building material impact on a building's operational energy requirements?

Strong case for improving New Zealand's unsustainable homes

Group finding solutions to improving NZ's poor housing stock

New Zealand homes are cold, damp, unhealthy and inefficient. They contribute to poor health, increase environmental impacts and take money out of our pockets.

However, these problems can be fixed with a relatively simple set of changes to our homes that the Government needs to drive.

These are the findings of a report to Government from Beacon Pathway, a group of agencies with a common interest in improving the ways that ordinary New Zealanders live.

Beacon general manager Nick Collins is concerned about the scale of the problem. "Our homes are, on average, 6ºC colder than the World Health Organisation's recommended indoor temperature," he says.

"Nearly half our homes are mouldy. We have become used to living in poor conditions, and that's not acceptable."

Mr Collins points out our "clean, green" image does not extend to everyday resource use. "The inefficient use of energy and water in New Zealand homes imposes high costs on households and increases carbon emissions."

The health impacts are also significant — New Zealand has the second highest rate of asthma in the world, which is related to our poor housing conditions — and cost taxpayers in the form of healthcare needs related to unhealthy housing, he says.

Beacon Pathway sees its report as a wake-up call on the health and environmental effects of the houses we live in, and the costs to families and the nation.

While the report backs recent research showing that people on low incomes suffer most as they tend to live in the poorest housing, more affluent households tend to use more water and more energy to heat inefficiently designed homes, creating significant environmental impacts.

"We all need to realise that this is everyone's problem, and we all have to commit to a solution. Beacon sees Government as a key player to drive the necessary changes, both as a regulator, funder and landlord."

The group believes current Government initiatives, while a good start, are not sufficient to address the problem effectively. In particular, Beacon recommends focusing on a combination of actions to make the most difference to health and the environment.

"Installing better heating is much more efficient if you insulate and ventilate properly at the same time," Mr Collins says.

"Sustainability is not just about energy use but needs to also look at the quality of the air we breathe inside our homes, our use of water, the materials we use and the waste we produce."

There are enormous benefits to be gained by upgrading New Zealand's housing stock in terms of its sustainability.

Economic analysis shows that combinations of simple changes to housing on a national scale would save enough energy to power 50,000 homes each year, and save New Zealand families $2 billion by 2017."

New insulation requirements mean smarter living

New requirements are the most significant energy efficiency improvements in 30 years

New insulation standards being required across New Zealand over the next year will mean warmer, healthier and cheaper-to-run homes.

The new requirements are the most significant improvements to the energy efficiency of houses in 30 years. New homes will now have better insulation, including double-glazed windows in most instances. The new standards also apply to extensions to existing homes.

From November 1, 2007, the standards took effect in the South Island and the North Island's Central Plateau. From July 2008, they come into force in the North Island south of Auckland and, for Auckland north, from October 2008.

Houses must now be built to use 30% less energy than was previously necessary to stay at a comfortable temperature.

So while the extra investment in insulation will add modest costs to new homes ($3000 to $5000), it is estimated these will be recouped through lower gas and electricity bills in three to seven years.

Higher capital value

The benefits will be long lasting. Better insulated homes have a higher capital value and money will be saved on lower power bills for years to come.

Health benefits also come with warmer, drier homes, resulting in less respiratory illness, fewer days off work and visits to the doctor.

The environment benefits too — if less power is used to heat homes, less electricity needs to be generated by burning fossil fuels (a process which emits greenhouse gases into the atmosphere contributing to climate change).

A new booklet, *Your Guide to $marter Insulation*, outlines the new insulation requirements and technical information for consumers and building practitioners to assist with planning a new home or extension.

See www.smarterhomes.org.nz to download the booklet.

Or for hard copies, email info@dbh.govt.nz or phone 0800 242 243.

NZ's sustainability problems: a backgrounder

Who is Beacon Pathway Ltd?

Beacon is the vehicle chosen by a number of like-minded organisations that are working to find affordable, attractive ways to make ordinary New Zealander's homes more sustainable — warmer, healthier, cheaper to run and kinder to the environment.

Beacon provides science-based New Zealand research outputs, funded by Building Research, Scion, New Zealand Steel, Waitakere City Council, Fletcher Building, and the Foundation for Research, Science and Technology.

Beacon Pathway undertakes a variety of research into the sustainability of New Zealand homes, investigating the current state of homes, and innovations, materials and processes to improve their comfort and sustainability, while keeping affordability as a key consideration.

Beacon has constructed research homes in Waitakere City and Rotorua — homes designed to be affordable, healthy and use fewer resources than a standard new home — and is currently retrofitting homes in Wellington.

Its new research programme includes building 100 new NOW Homes, and retrofitting 1000 existing homes around New Zealand to a high standard of sustainability.

The problem with New Zealand homes

New Zealand homes are cold, damp, unhealthy and inefficient in energy and water use. Cold, damp homes pose serious health risks, particularly for the most vulnerable groups in the community who spend the most time at home.

Research by Beacon and others shows that New Zealand homes are, on average, 6°C below the minimum winter temperatures recommended by the World Health Organisation, 45% of all New Zealand homes are mouldy and the air inside New Zealand homes can be more polluted than outdoor air.

New Zealand has the second highest rate of asthma in the world, and an excess winter mortality rate of 1600. This figure, not seen in other OECD countries, is attributed to our unhealthy homes.

The inefficient use of energy and water in New Zealand homes imposes high costs on households in energy and water bills (or council rates for building water infrastructure). All of this produces carbon emissions contributing to climate change and New Zealand's Kyoto bill, as well as the environmental effects of extracting fresh water and disposing of wastewater.

Not to mention the high cost to Government and taxpayers of all the healthcare required as a result of our unhealthy homes.

Current Government initiatives and market mechanisms are not sufficient to solve the problem. There is a need for a much higher standard of retrofit than is currently undertaken as part of the EECA-supported voluntary programmes, and for higher standards in the Building Code.

What is a sustainable house?

Beacon has developed benchmark measures for energy and water consumption, waste, indoor environmental quality and materials used in house construction, which define Beacon's High Standard of Sustainability.

These measures represent a benchmark against which the sustainability of New Zealand homes can be measured, and have been developed with affordability as a significant consideration.

A sustainable house uses considerably less energy and water, has indoor temperatures which meet the World Health Organisation's minimum standards, has adequate ventilation, low humidity and moisture levels, provision for waste minimisation in building and use of the house, and uses sustainable materials in construction or renovation.

Benefits of increased sustainability

Increasing the sustainability of New Zealand's housing stock will:

- improve New Zealanders' quality of life through healthier homes,
- reduce total energy requirements in New Zealand,
- reduce carbon dioxide emissions and assist in meeting our Kyoto commitments,
- reduce demand for reticulated water (and the associated energy required), with longer life for infrastructure and environmental benefits, and create a more resilient water system,
- increase productivity for employers,
- make more efficient use of New Zealand's resources, and
- improve the New Zealand housing stock in terms of resilience to global challenges such as climate change, resource availability and population change.

Beacon's solution

Beacon's report argues the case for the stepwise change that is needed to improve our housing and meet the Government's goals of being truly sustainable, carbon neutral and our Kyoto commitments.

Through its research, Beacon has developed benchmarks for a High Standard of Sustainability that New Zealand houses should meet. Their research shows that homes can be built and retrofitted to a high standard of sustainability, with significant gains in health, resource efficiency, environmental, social and economic outcomes.

Relatively simple innovations, when used in combination, can make a big difference, with national benefits as well as to individuals. Beacon's research identifies that there is particular value in implementing energy, health, environment and water efficiency as a combined package, rather than on an issue-by-issue basis.

Economic analysis by Infometrics (who has carried out analysis for Government on areas such as the impact of the Emissions Trading Scheme), shows that a combination of simple innovations (ceiling and floor insulation, efficient space heating, energy efficient lighting, efficient water heating, water saving devices, and water metering) would generate:

- savings in household energy consumption of almost 22 PJ per year, or enough to power more than 50,000 New Zealand homes for a year,
- a direct private gain to households equal to 1% of GDP by 2017, or $2 billion,
- a reduction in CO_2 emissions of 3600 kt per year, the equivalent of $54 million in tradable emissions (at $15/tonne),
- water savings of 81 litres per person per day, or 130 million cu m per year, the equivalent of 52,000 Olympic swimming pools, and
- additional non-monetary benefits of healthier and more comfortable homes, and environmental benefits.

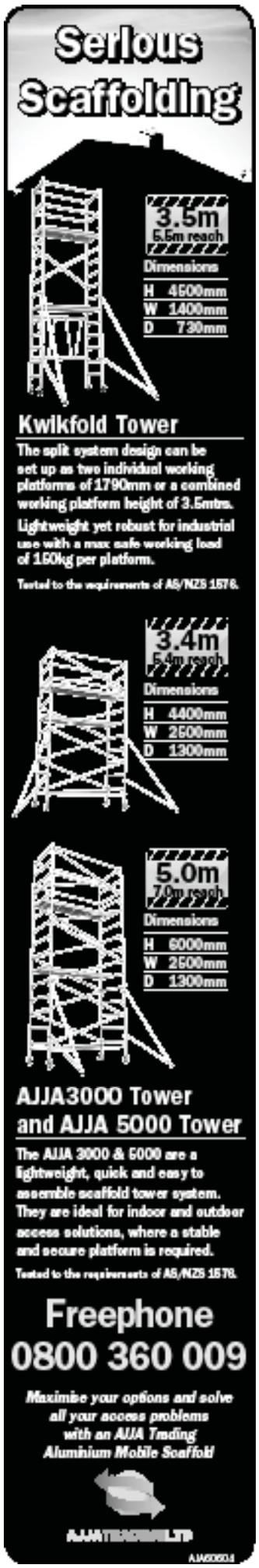
Serious Scaffolding
3.5m
5.5m reach
Dimensions
H 4500mm
W 1400mm
D 730mm
Kwikfold Tower
The split system design can be set up as two individual working platforms of 1790mm or a combined working platform height of 3.5mtrs.
Lightweight yet robust for industrial use with a max safe working load of 150kg per platform.
Tested to the requirements of AS/NZS 1576.
3.4m
5.4m reach
Dimensions
H 4400mm
W 2500mm
D 1300mm
5.0m
7.0m reach
Dimensions
H 6000mm
W 2500mm
D 1300mm
AJJA3000 Tower and AJJA 5000 Tower
The AJJA 3000 & 5000 are a lightweight, quick and easy to assemble scaffold tower system. They are ideal for indoor and outdoor access solutions, where a stable and secure platform is required.
Tested to the requirements of AS/NZS 1576.
Freephone
0800 360 009
Maximise your options and solve all your access problems with an AJJA Trading Aluminium Mobile Scaffold
AJJATRADEWELTS

Real stone made simple

If you or your clients have ever wanted the beauty and character of real schist, but without the cost, time and mess of traditional stone installations, there is now a unique and simple solution available.

DesignaSchist is an innovative range of modular stone products, which significantly reduces installation time and overall cost by combining proven brick construction with the natural beauty and value adding qualities of real stone.

DesignaSchist uses the finest quality hand-selected and placed, pieces of real stone, embedded in a Z-shaped, pre-formed concrete brick.

This modular stone system has the same advantages as brick cladding:

- It meets the New Zealand Building Code requirement as an acceptable solution.
- It is laid exactly as bricks have been for hundreds of years, using a drained and ventilated cavity, and can be laid in less than half the time of traditional stone.
- It is easily installed by a brick or blocklayer.
- It is delivered on pallets and placed around the site — no messy piles of stone and aggregates.
- There is minimal waste and clean up.
- There are no substrate costs or risks.
- There are a range of schist colours to choose from.

DesignaSchist can be used for cladding, interior or exterior features, chimneys and fireplaces. And the specially designed column brick interlocks on four corners to quickly and easily form a stone column that can be either tied back to a post or concrete filled.

Schist veneer panels, box columns, matching letterboxes and solid stone sills and capping complete the range.

For further information contact the exclusive distributors at designaschist@xtra.co.nz.

DesignaSchist veneer panel on Whisper Cove beachfront development.

Z Brick used as interior fireplace surround and chimney.

DesignaSchist column bricks on Styleline Homes' showhome, as featured recently on James Hardie's television infomercial.

New Stevenson products released recently

Above: The Architectural Masonry range and, right, the new Terrazzo Tile range.

Stevenson has launched two new product ranges — a new Architectural Masonry range and a new Terrazzo Tile range.

Stevenson's DryBlock Architectural Masonry range and its Veneto range of Terrazzo Tiles were introduced to the market late last year.

The DryBlock Architectural Masonry range is available in three standard colours — Fire Ash, Kohl and Pumice.

There are also different options for the block's texture, and when you consider mortar colours and joint styles, the new range means that there are a variety of cladding options to suit any taste.

The Veneto Tile range is available in seven standard colours, with the option of different sizes and a bullnose tile to match.

Veneto Tiles are suitable for indoors or out, giving even more opportunity to create individual style with Stevenson products.

After canvassing some of New Zealand's top architects and designers, Stevenson has chosen the most contemporary colours, sizes and styles for both product ranges.

High performer sealant/adhesive

Holdfast Fix All MS 220LM is a neutral, high performance flexible sealant/adhesive, based on MS Polymer technology.

The product has a current BRANZ appraisal (Cert. 419). It conforms to the New Zealand Building Code and has a durability opinion of 15 years.

It has excellent adhesion even in adverse conditions. It resists mould growth and has superior elongation, allowing movement accommodation of up to 900%.

It is capable of primerless adhesion on many substrates, which means it is easy to tool and finish. Its high bond strength makes Fix All MS 220LM an excellent product for expansion and connection joints in the building industry.

As well as being solvent and isocyanate-free, it is UV resistant and can be painted with most paint systems.

It is available in 290ml cartridges and 600ml sausages. Colours available are white, grey and black. For further information visit www.holdfast.co.nz.

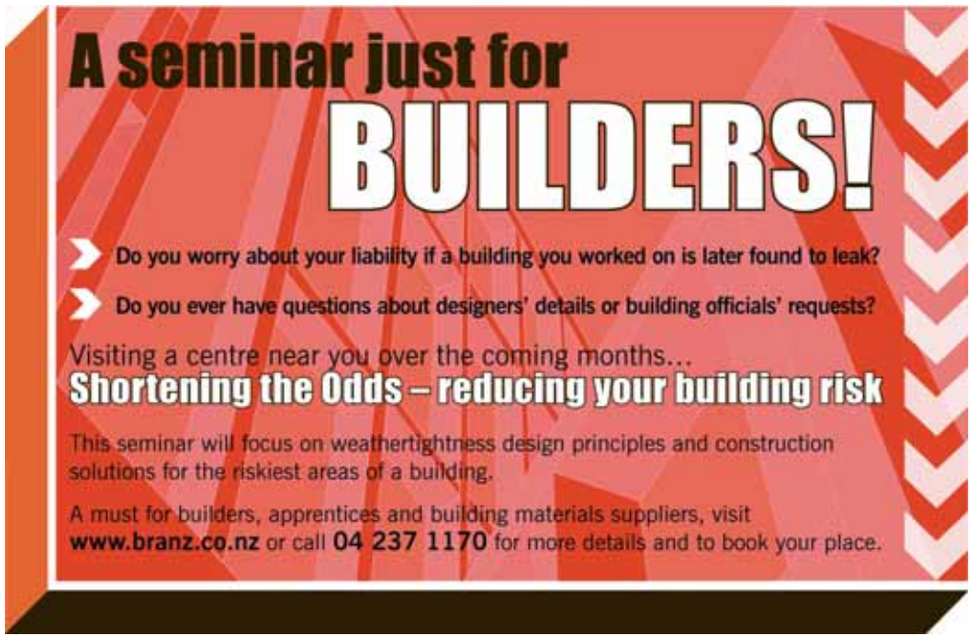

CPD scheme introduced by steel company

Course tackles design issues faced by architects on large buildings

In an effort to support the ongoing education of architects, Dimond has become involved with the New Zealand Institute of Architects' Continuing Professional Development scheme.

The scheme runs courses on important issues affecting architecs, covering topics such as design, practice and other issues relevant to the concerns of architects, clients and the wider community.

Dimond has recently introduced a CPD-rated course which is presented to architects around New Zealand. The course, titled *Roofs 25 metres & beyond, the long and short of it*, tackles the design issues architects face when designing large buildings, and arms them with the knowledge to bypass these issues with the use of the correct and most effective products for the job.

To find out more or request a seminar, go to www.dimond.co.nz/cpd_earn_points.asp.

Coming Soon: The new Hibond end cap

Dimond is poised to release a new Hibond end cap into the composite steel flooring market which promises to simplify installation and reduce the time it takes to lay the profile.

The new product makes installation much simpler as the product does not need to be fitted before the profile is laid. The Hibond sheets are laid in place and the end cap is simply fitted in the ends to blank off the ribs at the end of the sheet.

The cap is then fixed in place by drilling a screw through the pre-punched locating hole. The product will be available early in March.

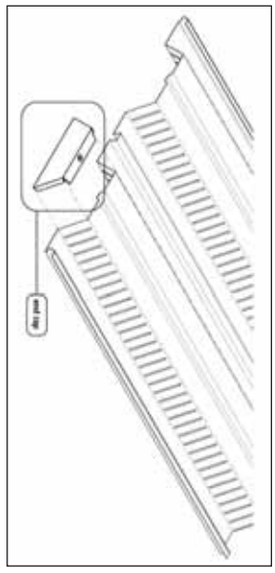

The new Hibond end cap.

Feeling the burn

Good workplace safety is all about minimising risks, which is why Dimond has designed a range of anti-glare roofing foils to help roofing installers struggling with the intense heat and glare they face while working on the roof, generated in part by the reflection of roofing foils.

This anti-glare coating aims to reduce any harmful effects that may result from long-term UV exposure, such as sunburn and skin cancer disorders, and to lower discomfort to eyes from glare and provide a working environment that's cooler and more comfortable.

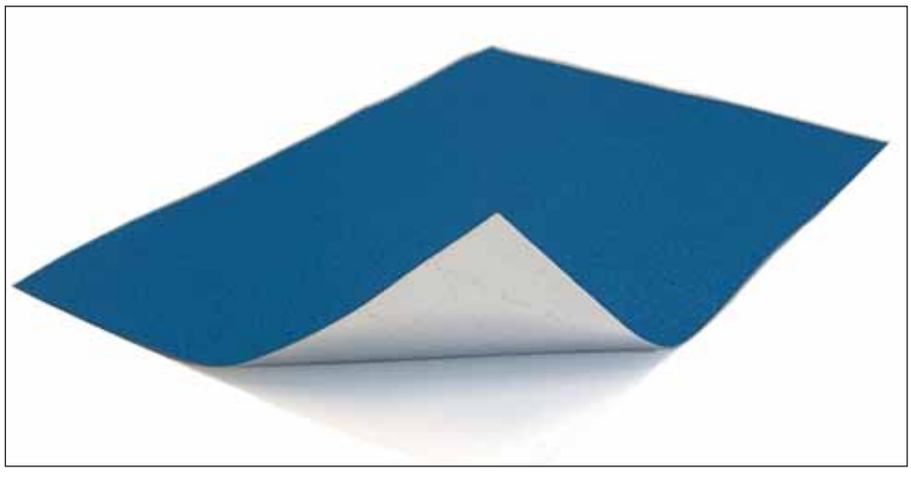

Pink Batts Barriers Anti-Glare Foil.

The anti-glare technology has been added to selected foils in the Sisalation (bitumised foil) and Flamestop (fire retardant foil) range so buildings still get an effective vapour or fire barrier but with the added protection for installers.

For more information email dimond@dimond.co.nz.

Wall Cladding Like No Other...

Sahara®

contemporary wall cladding

Dimond Sahara®

- Stunning, unique appearance
- Perfect for feature walls, whole houses or even fencing
- Match or contrast with the colour of your roof, fascia or spouting
- For residential and commercial use
- Available in popular cladding colours to suit all environments
- For more information call 0800 DIMOND (0800 346 663)

GR3098T

www.dimond.co.nz

Dimond

Strong scrap metal demand forces steel price jump

Pacific Steel Group has advised customers it will be increasing the price of all its steel reinforcing and wire products by 12%, effective from March 1.

The price rise is due to a 25% jump in the cost of scrap metal since Christmas.

Pacific Steel Group products are made entirely from New Zealand-sourced recycled scrap metal, but the price is set by the international market.

Pacific Steel Group general manager John Beveridge says ongoing volatility in global steel commodities market means the company will be continually reviewing its prices in the coming months.

"It is highly possible we may have to increase the price of our steel products again in the near future, even as early as April," he says.

The unprecedented rise in the price of scrap metal has been attributed to booming demand for steel in India and China, a revival of demand in South-east Asia and a tightening of the supply of scrap metal from large sources such as Russia.

Mr Beveridge says despite the global shortages, Pacific Steel Group will be able to maintain supplies to its major customers.

Pacific Steel Group has reiterated advice to its direct customers to not have fixed price agreements with their end customers due to the likelihood of continued volatility in the steel market for some time.

Pacific Steel Group in Auckland is New Zealand's only manufacturer of reinforcing steel and wire, under the Seismic and Wiremark brands respectively.

Informative steel housing link now up on SCNZ site

The Steel Construction New Zealand Steel in Housing web page allows members to view a quick selection of steel beams, posts and footings compatible with the requirements for NZS 3604, Non-Specific Design of Light Timber-Framed Buildings.

The tables have been adapted from the Onesteel Steel in Housing booklet to suit New Zealand loadings and preferred deflection criteria.

Some typical details commonly used for fixing steel beams to steel and timber posts are included.

Go to www.scnz.org and look for the Steel in Housing link.

Right: The Steel in Housing page on the SCNZ web site.

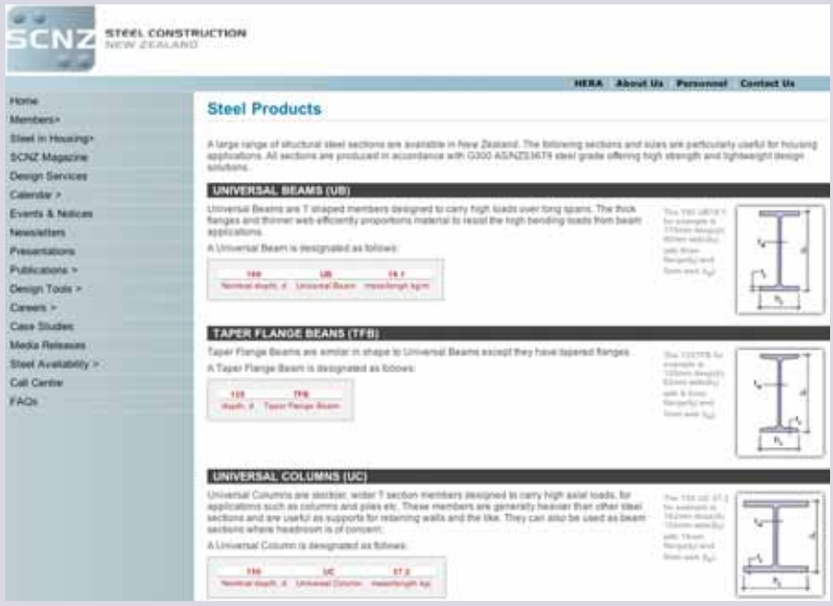

Tray-dec NZ Ltd

Traydec 300 has a long history in the composite floor market and now Traydec is excited to announce the launch of two new profiles, **Concrete Saver 60** and **Ultra Span 80**, to join the Traydec 300 line. Both products are the latest generation in hi-tech composite steel decking that allows for both shallower and longer spans. Because this steel deck has no extra height due to profile intrusions, the required slab thickness to control shrinkage cracking is less, resulting in lighter slabs.

CS60 being produced at our Avondale factory.

They are specifically designed to use **up to 4% less concrete** than other profiles, currently on the market, giving substantial cost savings.

For full details see our web site or call 09 820-9133 or 04 233-9421. A free product catalouge is available and a representative would be happy to discuss your requirements.

www.traydec.co.nz

Become a Future-Proof Builder

Future-Proof Building — what is it?

You should have heard a bit of talk by now about the concept of Future-Proof Building (FPB).

The easiest way to sum it up is this: it's building a better home to live in now, that's worth more to the owner in the future.

We are all conscious of the cost of building and maintaining a home, and want homes that are safe and healthy places for our families and our customers' families to live in.

By incorporating the eight principles of FPB, builders and their clients can create a safer, warmer, healthier home to live in, while reducing the environmental impact by using sustainable products.

The eight principles are Energy Efficiency, Health and Safety, Life Cycle Costing, Quality Assurance, Resource Responsibility, Security and Automation, Sound Control and Space Management.

Carters have made a major commitment to the future-proofing message, and you may have noticed an FPB advert on television at the moment with Greer Robson as the presenter.

This advert is the first in an FPB series, and promotes Carters as a stockist of FPB products as well as the benefits of building and renovating using the FPB concepts.

Other FPB partners will be on television later this year with the same format.

Are you ready for the future?

Becoming a Future-Proof Builder lets you leverage off a major industry initiative, designed to educate consumers about the importance of long-term solutions when they're building or renovating.

The general media is also promoting many of the FPB concepts as well, for example sustainability, energy efficiency and health and safety as they are growing trends.

The Future-Proof Building programme gives you the tools to educate your customers, so that they know how you can build them a better home to live in now, and one that will be worth more to them in the future.

To find out more about becoming a Future-Proof Builder, including information for your customers, call 0508 FUTURE, visit www.fpb.co.nz or talk to your local Carters rep.

A Tomorrow's Showhome which profiles the different FPB products and solutions that are used throughout the house.

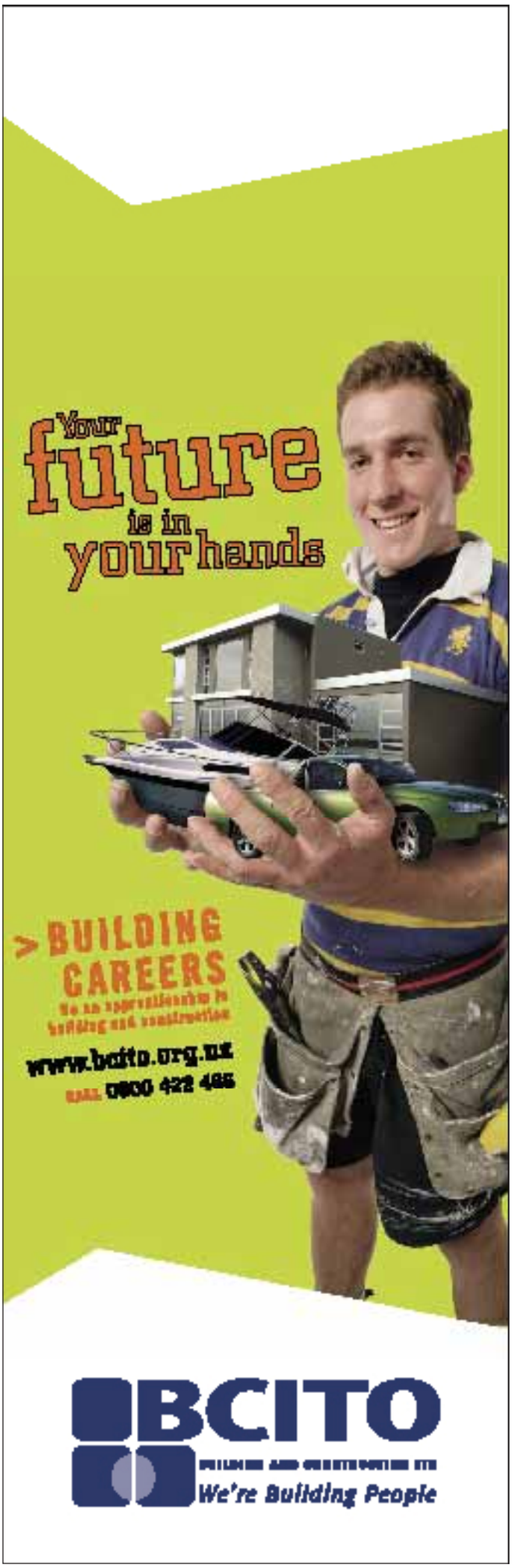

bcito news

Fire up your business for 2008

Advertise your apprenticeship vacancy online with BCITO and be in to win!

The BCITO Career Launcher is the newest online tool connecting apprenticeship seekers with employers.

Career Launcher
Apprenticeship vacancies online

Register as an employer

Employers must meet certain criteria to take on an apprentice. Companies who are not currently training with the BCITO will require approval.

Build your company profile

Personalise your profile by adding your company logo or images of your latest project or team members.

Add the apprenticeship details

Outline the type of person you are looking for or use the custom-designed template.

Career Launcher is tailor made to meet the specific needs of employers in the construction industry.

- It is available to all BCITO-approved employers.
- Apprenticeship vacancies advertised on Career Launcher reach a targeted audience of people specifically looking for apprenticeships. Apprenticeship seekers can register to receive email updates every time a new job is added that matches their criteria. More than 300 apprenticeship seekers have registered their interest already.
- It's easy to use. The BCITO has taken the hassle out of writing advertisements with a custom-designed job template and the ability to make a vacancy stand out by uploading images such as a company logo or a photo of a recent project.
- There is no charge for this service.

Be in to win!

To kick off Career Launcher, the BCITO is running a special offer for employers — register and list your apprenticeship vacancy before March 31, 2008, and you go in the draw to win one of three Broil King Crown 90 barbeques.*

Simply go online at www.bcito.org.nz and follow the easy three-step process.

****Terms and conditions apply and can be found online at www.bcito.org.nz.***

Voidable transaction provisions of Act allow payment 'clawbacks'!

Tim Bates of Auckland law firm Legal Vision analyses a case where a subcontractor was asked to pay back the last two payments made on a construction contract by a head contractor that went into liquidation!

A recent High Court decision involved TRC Consultants Ltd, an audio-visual componentry company, which was asked to pay back $55,000 worth of payments received from Southern Lakes Construction Limited (SLC), a company that went into liquidation, within months of the payments being made.

The voidable transaction provisions of the Companies Act 1993 allow the liquidators of a liquidated company to claw back payments made out to creditors within a restricted period of six months prior to the liquidation.

This case concerned two payments made by SLC near the end of the construction contract. The first payment was made on September 30, 2005, and the second payment on October 4, 2005, and totalled $55,000. SLC went into liquidation on or about November 23, 2005.

LegalVision

At Three Lamps Lawyers

Legal Vision specialises in providing legal advice to the Building Industry.

Principal: Timothy Bates LLB (Hons)

LEVEL 1
283 PONSONBY RD
PONSONBY

PO BOX 47 587
PONSONBY
AUCKLAND

PHONE 09 360 2415
FAX 09 361 2412
EMAIL legalvision@clear.net.nz

It was argued by this firm on behalf of TRC that the two payments ought not to be set aside for the following reasons:

• It had not been satisfied that TRC received more towards satisfaction of its debt with SLC than it would otherwise have got in liquidation,

• The transaction took place in the ordinary course of business. Under this head we argued that:

• these payments were one of a series of payments made pursuant to a contract with regard to the construction and installation of equipment at the request of SLC. The business records established that during the course of the contract, SLC had made regular payments following the receipt of invoices. Some of those payments were up to two months after the invoices had been rendered;

• although these two payments were not for the full amount claimed in the invoices, this is not uncommon in building contracts where often head contractors retained sums as an inducement to ensure that the subcontractor completed the contract, and to cover any defects or maintenance with regard to work performed by the subcontractor.

Finally we argued in the alternative, that even if the transactions were voidable, that TRC was entitled to relief under s296(3) of the Companies Act 1993 because:

• TRC had established it had received the payments in good faith,
• TRC had altered its position in the reasonably held belief that payment was validly made and would not be set aside. In support of this, TRC had continued to arrange for its subcontractor to perform work on behalf of its contract with SLC for some months after receipt of these two payments.

TRC had incurred considerable expense in continuing work on this project which it would not have incurred had it known about the impecuniosity of SLC. After the last payment made by SLC, it rendered a further account to SLC of $18,991 and $4720.08.
• Finally we submitted that the large delay of 18 months in serving notice upon TRC to pay back the $55,000 made it inequitable to order these monies be paid back.

The judge held that the payments fell within the meaning of payments made in the ordinary course of business.

He was swayed by the evidence to the effect that payments at the end of a contract are often less than is claimed because retentions are held back in order to ensure contractors come back onsite.

Industry not characterised by prompt payment and precise accounting

He also referred to comments in already decided decisions on this point, that the building industry is not characterised by prompt payment and precise accounting.

He further found that even if he was wrong on this point, TRC was entitled to relief under s296(3) of the Companies Act 1993. His key finding on this aspect was that TRC had altered its position. At paragraph 31 he states:

There is, however, clear evidence that the plaintiff, after receiving these two payments, continued to perform its obligations under the contract with SLC. Furthermore, in performing its obligations, the plaintiff incurred extra expense including liability for payment of work performed by its subcontractors.

Valuable alternative opportunity lost

In short, TRC had lost a valuable alternative opportunity in refusing to continue to perform the contract.

While, in this instance, we managed to achieve a good result for TRC, the case does show the difficulties caused by accepting payments from companies that shortly afterwards go into liquidation.

Unless it can be shown that the payments were made in the ordinary course of business or that the position of the party receiving payment has been altered, then that party may have to pay back the sums received.

Yurt 4 U?

Dr Kerry Rodgers steppes out into the wondrous world of yurts

In Old Turkic, yurt is the homeland, the dwelling place. For the nomadic people living on the steppes of Central Asia, it described their portable, felt-covered, wood-framed homes that were — and still are — their principle dwelling places.

Getting it up

A yurt's skeleton consists of a simple, circular, self-supporting wooden frame that includes:

• lattice wall-sections,

• a door-frame,

• straight of curved roof poles that vary in size and weight, and

• a crown supported by one or more columns.

The framing timber is a precious commodity. No trees grow on the high Central Asian steppes, and the wood must be sourced through trade with people living in the valleys below.

Once erected, the frame is covered with a wool felt that provides an insulation that breathes and keeps the yurt cool in summer but warm in winter.

In its turn, the felt is covered with animal skins, canvas or sun-covers. The whole is lashed together with ropes or ribbons encircling the walls, and is kept under compression by the weight of its covers that can be supplemented by a heavy weight hung from the roof centre.

The entire structure is designed to be readily dismantled and carried to another site in the back of your ute which, today, has displaced the camels and yaks of yesteryear.

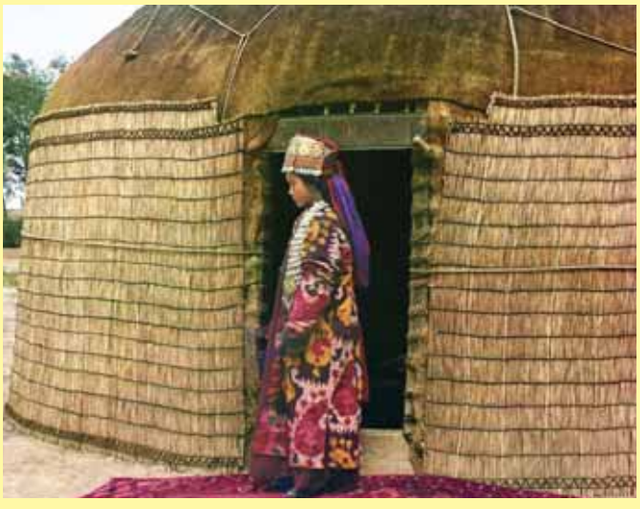

Shangrak

The crown of the yurt, or shangrak, is symbolic of many Central Asian cultures. Among Kazakh traditionalists, a yurt is passed down through the generations. Like grandpa's axe it can eventually have had three new heads and a dozen new handles, with lattice frames being replaced and felt coverings patched.

However, the shangrak is taonga. It was preserved intact with a family's heritage proclaimed by the accumulated smoke and soot of home fires past.

A stylised shangrak provides the central motif of modern Kyrgyzstan's flag.

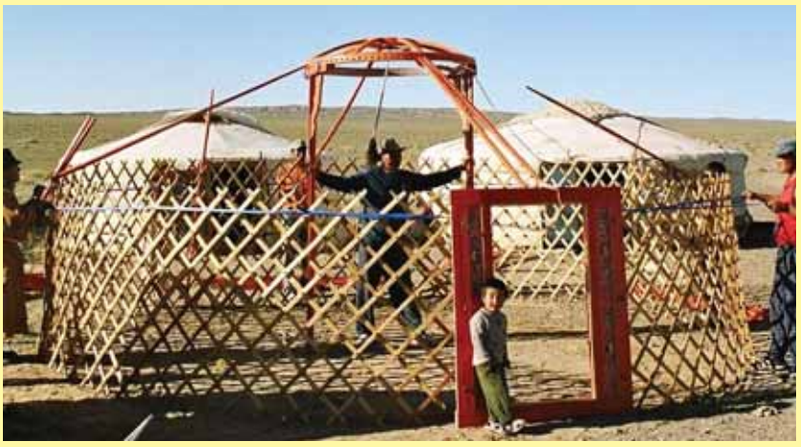

Westie yurts

Ever since Marco Polo did his Big OE, western enthusiasts have promulgated the virtues of yurt-living. In most cases, today's westie yurts are semi-permanent and employ hi-tech materials. Often they are engineered for extreme weather conditions.

In North America, a yurt fad emerged in the swinging sixties, but today's yurts bear little resemblance to the felt homes of the steppes.

Most are permanent structures and are typified by those provided for campers in some Canadian and United States parks. And being the US of A, there is, of course, even a Yurt Foundation.

Modern European yurts are closer to their Mongolian counterparts, although adapted for the wetter climate with steeper roof profiles and contemporary waterproof coverings.

The design would seem to hold potential for that of the ultimate Kiwi summer bach. It is snug yet cool and highly portable. The barbie can be positioned under the crown.

Resource consents aside, getting one up might provide a late summer project for any RMBF member with time on their hands.

You can order yurt plans from the Yurt Foundation. Try www.yurtworks.co.uk or www.yurtinfo.org/yurtfoundation.php where you can even build a virtual yurt complete with skylight and deck.

I wonder what the carbon footprint might be?

Images: Wikipedia Commons

Short on staff, short on skills, short on time!

By Sue Hirst
Director, CAD Partners Pty Ltd

The construction industry isn't alone in issues such as staff and skills shortages. An issue faced by all businesses is trying to get more done with fewer resources.

One of the key drivers in a service-based business is personnel productivity — ie, getting the most income earning capacity from production staff/labour hire.

One way to improve the situation is to do less work but ensure it is more of the profitable or desirable work.

You may have heard of the Pareto Principle, which is the 80/20 rule. An example of which is that 20% of customers produce 80% of sales and profit.

The Pareto Principle has proven valid since the late 1800s when it was discovered by Vilfredo Pareto who was an economist.

It follows then that we should concentrate on the 20% of customers, jobs, services and staff that are producing 80% of the results.

In order to know who the 20% are we need systems in place for tracking results and who/what is achieving them. If you could do this then you would probably need fewer resources to achieve better results.

As a business owner/manager it can be hard to extricate yourself from the business for enough time to spend working on the business rather than in it.

If you can be disciplined enough to do this, it can pay big dividends, in terms of improved efficiency, personal satisfaction and lifestyle for the business owner, as well as better profit and cashflow. What you need to achieve these benefits are systems.

In order to set up systems you must get the knowledge out of your head and into a format that staff can understand and follow.

You need to identify what are the most critical actions in your business, who is responsible for them and how they should be done.

Once you know these things, you can share this information with others and begin to do less of them yourself.

Obviously, staff need to be trained and monitored in these actions, but a little time invested in this area could pay big dividends down the track.

Staff who have systems to follow feel much more secure in their work and create fewer distractions for themselves and others.

Businesses with good systems and happy staff become the employers of choice.

Who wants to work in a business run by crisis management where everyone is stressed and unhappy? Any human resources expert will tell you money often comes way down on the list of motivators for staff.

Who wants to work in a business run by crisis management where everyone is stressed and unhappy?

An example of critical actions in a service-based business is the fulfilment and management of jobs. If you have a good job management system you have access to:

- information required for staff to do the job,
- information about job profitability for the business owner,
- information about hours paid to staff compared to those sold to customers to make improvements to margins, and
- information about work in progress, speeding up invoicing of jobs and improving cashflow.

Systems make it much easier to manage a business, as the manager doesn't have to think of everything all the time — they simply point staff to the system.

This leaves the business owner free to work on the business rather than in it.

Documented systems also create an environment for improvement. It gives staff the opportunity to contribute new ideas and see them incorporated into the system — another motivator and retainer of good staff.

Systems can take many forms — eg, manuals or a web-based method. Web-based methods for many business processes are popular today. They enable owners to run a business remotely when necessary — eg, when on holidays or even just from home.

If a staff member has a question you don't have to scurry back to the office to explain the answer. You can simply direct them over the phone to the relevant information and talk them through it.

These types of systems are not as expensive as you might think. What price do you put on your own sanity and health?

Any type of system must include a reporting function. This enables the business owner to see the results in order to take corrective action quickly and make constant improvements.

Another benefit of having systems in place is in added value to your business. If you wish to one day sell your business and retire or exit, having systems is much more attractive to a buyer than a business that runs from inside the owner's head.

• CAD Partners is a team of financial controllers who can review your accounting systems and advise on how you can improve your cash position and profitability.

Go to www.cadpartners.biz.

Download complete copies of
Building Today *at*
www.buildingtoday.co.nz

What's On the Web?

www.buildingtoday.co.nz

Congratulations go to Tony Colhoun of Tauranga and Grant Mackay of South Auckland. They both won free passes to the two-day Building and Construction Disputes and Contract Management Conference on February 25 and 26, 2008, at Rydges Hotel, Auckland, valued at more than $3800 each!

Business diary winners:

Tara Ginsberg (Auckland), Vivienne Assink (South Auckand), Greg Goodall (Motueka), Kieren Mallon (Auckland) and M Larkin (Auckland) were the lucky winners of a Bizmo business diary each after entering to go into the draw at www.buildingtoday.co.nz!

Go online to win another Alco Products Buddy 3 ladder with *Building Today*!

Make sure you get in the draw to win more great prizes EVERY month — just log on to www.buildingtoday.co.nz

Subscribe to Building Today

Building Today is the industry news magazine that keeps you up to date with what's happening in the building industry.

Subscribe today by completing this coupon and FREEPOSTING it with your cheque

Please send me 11 issues of Building Today. Attached is a cheque for $56.25 (incl GST, GST No: 66 019 802)
FREEPOST to: BUILDING TODAY, FREEPOST 67 299, P O BOX 35 343, BROWNS BAY, AUCKLAND

Name:
Company:
Address:
Type of business:
Signature
Date:

Who wants to be a Fishin' CHIPPIE?

Spend $200 incl GST or more on selected **Pinex**™ Great outdoor timber outdoor timber before the end of March and you could

win 1 of 5 fishin' trips

for you and a mate - including accommodation, flights and transfers.

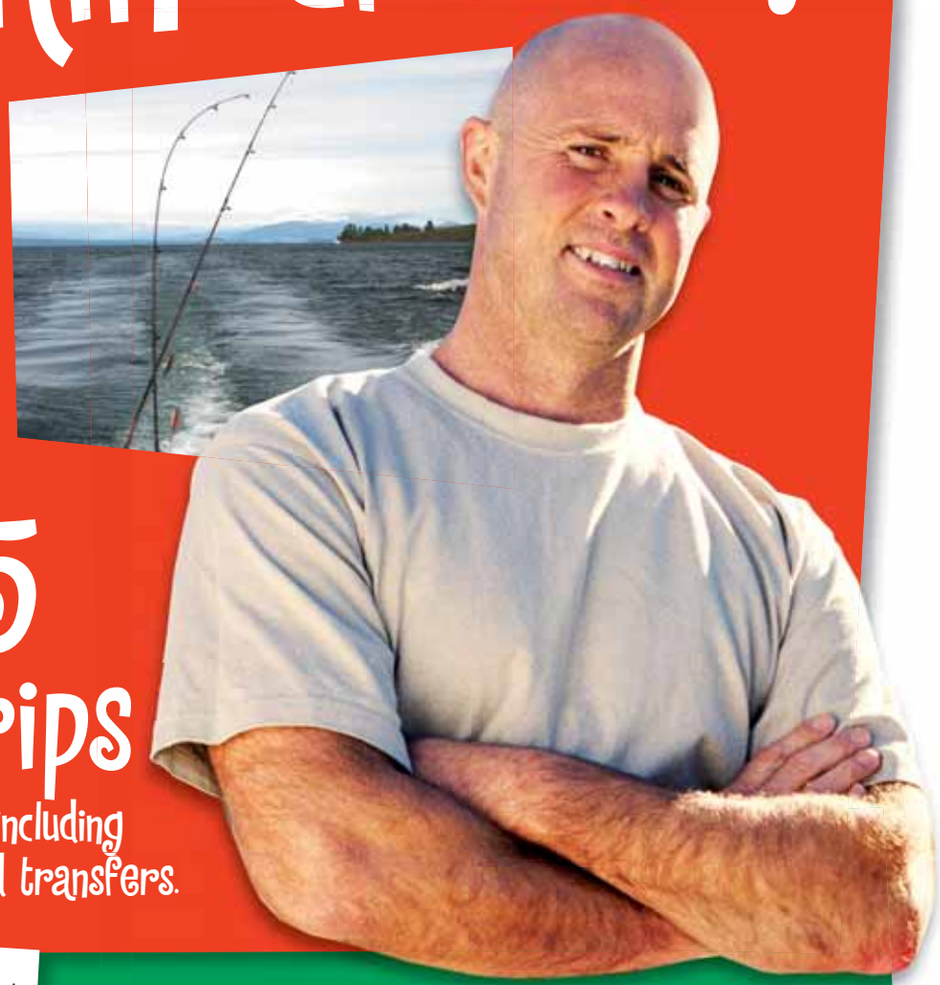

- Helifishing in the Hauraki Gulf to Great Barrier Island
- Ranfurly Banks, 3 day charter chasing gamefish
- 24 hours hunting bluefin tuna off Greymouth
- Full day Bay of Islands charter – snapper/kingfish
- Fly fishing for a day, staying at Tongariro Lodge

CARTERS Fishin' CHIPPIES

Selected **Pinex**™ includes decking, fencing, landscaping, posts and house piles.

Pinex® 100 x 40mm Radiata Merch H3.2 Decking
$2.13 per Lm (excl. GST)

Pinex® 200 x 50mm Radiata T&G H4 Retaining Timber
$4.70 per Lm (excl. GST)

Terms and Conditions: Promotion valid 1 February - 31 March 2008. For more details see full Terms and Conditions instore. Savings based on Carters normal retail price.

www.carters.co.nz

CARTERS